Schedule F2 Benchmark Agreement

Dated 2007

BENCHMARK AGREEMENT

TRANSPOWER NEW ZEALAND LIMITED

and

[*DESIGNATED TRANSMISSION CUSTOMER*]

CONTENTS

PART A: FOUNDATION 32
1. CUSTOMER'S DETAILS 32
2. TRANSPOWER'S DETAILS 32
3. BACKGROUND 32
4. COMMENCEMENT, OTHER AGREEMENTS AND REVIEWS 32
PART A1: GLOSSARY AND INTERPRETATION 34
5. GLOSSARY 34
6. DEFINITIONS IN ELECTRICITY GOVERNANCE RULES AND ELECTRICITY GOVERNANCE REGULATIONS 37
7. INTERPRETATION 37
PART A2: GENERAL TERMS 39
8. CREDIT SUPPORT 39
9. CALCULATION OF CHARGES 39
10. INVOICING 40
11. PAYMENT 44
12. PARTIES TO PROVIDE INFORMATION 45
13. FORCE MAJEURE 45
14. DANGER TO PERSONS AND PUBLIC SAFETY 47
15. CONSEQUENCES OF DEFAULT 47
16. CONSEQUENCES OF DE-ENERGISATION 51
17. TERMINATION BY CUSTOMER ON NOTICE 52
18. TERMINATION FOR INSOLVENCY OR ILLEGALITY 52
19. GENERAL PROVISIONS CONCERNING TERMINATION 53
20. LIABILITY 55
21. DISPUTE RESOLUTION 58
22. CONFIDENTIALITY 65
23. ASSIGNMENT 67
24. GENERAL LEGAL TERMS 68
25. NOTICES 69
PART B: POINT CONNECTION 69
PART B: POINT CONNECTION 70
26. SCOPE OF POINT CONNECTION 70
27. DEFINITIONS 70
28. CONNECTION 70
29. CONNECTION CODE 71
30. INFORMATION 71
31. ACCESS 72
32. METERING INSTALLATIONS 72
33. TECHNICAL COMPLIANCE OBLIGATION 73
PART C: GRID CONNECTION 74

34. SCOPE OF GRID CONNECTION 74
35. DEFINITIONS 74
36. SERVICE STANDARDS 76
37. REPORTING 77
38. COMPLIANCE WITH LAWS, RULES AND STANDARDS 81
39. POINTS OF SERVICE SCHEDULE 81
40. CHANGING AND REMOVING CONNECTION ASSETS 84
41. GRID CHARGES 87
42. TECHNICAL COMPLIANCE OBLIGATIONS 90
PART D: LOSSES AND CONSTRAINT EXCESS PAYMENTS 91
43. SCOPE OF PAYMENTS 91
44. DEFINITIONS 91
45. CUSTOMER SHARE 91
46. TERMINATION OF THIS PART 92
SCHEDULE 1 POINTS OF CONNECTION 93
SCHEDULE 2 POINTS OF SERVICE 94
SCHEDULE 3 GRID CHARGES 95
SCHEDULE 4 CONNECTION ASSETS 96
SCHEDULE 5 SERVICE MEASURES 97
SCHEDULE 6 ACCESS AND OCCUPATION SCHEDULE 102
SCHEDULE 7 CREDIT SUPPORT 111
APPENDIX 1 CREDIT POLICY 116
APPENDIX 2 GUARANTEE 119
APPENDIX 3 LETTER OF CREDIT 122
APPENDIX 4 DEED OF GUARANTEE AND INDEMNITY 125
APPENDIX 5 SURETY BOND 131
SCHEDULE 8 CONNECTION CODE 133

PART A: FOUNDATION

1. CUSTOMER'S DETAILS

1.1 **Full Name of Customer:**

[*To insert.*]

1.2 **Customer's Address:**

[*To insert physical and postal address and facsimile number to which notices under this Agreement are to be delivered or sent in accordance with section II of part F of the Electricity Governance Rules.*]

1.3 **Customer's Contact Person:**

[*To insert name of individual or office holder to whom notice should be addressed in accordance with section II of part F of the Electricity Governance Rules.*]

2. TRANSPOWER'S DETAILS

2.1 **Transpower's Address:**

[*To insert physical and postal address and facsimile number to which notices under this Agreement are to be delivered or sent in accordance with section II of part F of the Electricity Governance Rules.*]

2.2 **Transpower's Contact Person:**

[*To insert name of individual or office holder to whom notice should be addressed in accordance with section II of part F of the Electricity Governance Rules.*]

3. BACKGROUND

3.1 **Transpower:**

Transpower manages the **grid**.

3.2 **Customer:**

The Customer is one of the following:

(a) a **distributor**;

(b) a **generator** that is directly connected to the **grid**; or

(c) a **direct consumer** that has a Point of Connection to the **grid**.

3.3 **Agreement:**

This Agreement sets out the terms on which Transpower will:

(a) permit the Customer's Assets to be connected to the **grid**; and

(b) make the **grid** available for the conveyance of **electricity**.

4. COMMENCEMENT, OTHER AGREEMENTS AND REVIEWS

4.1 Commencement:

This Agreement commences on the date the **benchmark agreement** applies as a binding contract between Transpower and the Customer under rule 3.1.3 or 3.1.6 of section II of part F of the Electricity Governance Rules (the "Commencement Date").

4.2 Other Agreements:

(a) Subject to clause 4.2(b), from the Commencement Date this Agreement will:

(1) terminate any other agreement between the parties to the extent such agreement covers the same subject matter as this Agreement; and

(2) prevail over any other agreement between the parties to the extent such agreement is inconsistent with this Agreement.

(b) Notwithstanding clause 4.2(a), this Agreement will not affect:

(1) any **new investment agreement contract** between the parties, except that any provisions of this Agreement that are necessary in order for the **transmission pricing methodology** to apply, as provided in the **transmission pricing methodology**, in respect of the Connection Assets subject to the **new investment agreement contract** shall apply; or

(2) any contract or arrangement to which rule 2.1 of section II of part I of the Electricity Governance Rules applies to the extent that the effect of such a contract or arrangement may cause the System Operator to operate the **grid** voltage within a lesser range than that specified in the **AOPOs**. For the avoidance of doubt, for the purposes of rule 2.2.2 of section II of part I of the Electricity Governance Rules any such contract or arrangement is not terminated.

(c) For the avoidance of doubt:

(1) clause 4.2(a) does not limit rules 3.1.3, 3.1.4, or 8 of section II of part F of the Electricity Governance Rules; and

(2) clause 31 and Schedule 6 (Access and Occupation) only apply if the criteria in clause 31.1 are met.

(d) Except as provided in clause 4.2(a), this Agreement will not affect any other written agreement between the parties in force on the Commencement Date.

(e) The termination of any agreement under clause 4.2(a)(1) is to be without prejudice to any liabilities or obligations outstanding under that agreement as at the Commencement Date.

4.3 **Benchmark Agreement Reviews:**

If the **Board** initiates a review of the **benchmark agreement** under rule 7 of section II of part F of the Electricity Governance Rules and as a result of such review the **Board** decides:

(a) to recommend to the **Minister** an amendment to the **benchmark agreement** and/or to recommend to the **Minister** the making of one or more additional **benchmark agreements**; and

(b) that such amendment(s) should apply to existing agreements between Transpower and either all **designated transmission customers** or specified **designated transmission customers**, where those agreements are default **transmission agreements** that apply as binding contracts between Transpower and **designated transmission customers**, or those specified **designated transmission customers**, under rules 3.1.3 or 3.1.6 of section II of part F of the Electricity Governance Rules;

(c) that such additional **benchmark agreement(s)** should replace existing agreements between Transpower and specified **designated transmission customers** where those agreements are default **transmission agreements** that apply as binding contracts between Transpower and those **designated transmission customers** under rules 3.1.3 or 3.1.6 of section II of part F of the Electricity Governance Rules;

then this Agreement shall be deemed to be amended or replaced, and such amendment(s) or replacement(s) shall take effect, in accordance with the **Minister's** decision.

PART A1: GLOSSARY AND INTERPRETATION

5. GLOSSARY

In this Agreement, unless the context otherwise requires, the following definitions apply:

Acceptable Credit Rating
has the meaning specified in clause 1 of Schedule 7;

Agreement
means this agreement, comprising all Parts and Schedules set out in the contents page to this Agreement and all documents which are listed in Part A: Foundation as being incorporated into this Agreement, as added to, amended or replaced from time to time in accordance with this Agreement;

Associates
means in relation to either Transpower or the Customer, as the case requires, its directors, officers, employees, authorised agents, contractors, sub-contractors and professional advisors;

Business Day
means any day of the week other than a Saturday, Sunday, a statutory holiday as observed in Wellington, or a statutory holiday as observed in the place at which notices may be delivered to the Customer;

Charges
means any and all of the Grid Charges, the Licence Charges and any other charges payable by the Customer under any Part or Schedule;

Commencement Date
has the meaning specified in clause 4.1;

Connected Party
means any person who has **assets** physically connected to the **grid**;

Connection Code
means the code attached as Schedule 8 (Connection Code);

Customer
means the party or parties described in clause 1 and where more than one party means each of them jointly and severally;

Customer's Assets
means the lines, equipment and plant owned or managed by the Customer and directly related to any Point(s) of Connection, which are used for the consumption, conveyance or generation of **electricity**;

Customer Point of Service
means each of the **points of service** specified in Schedule 2 (Points of Service);

de-energisation
means, in relation to a Point of Connection:

(a) an interruption of conveyance of **electricity**; or

(b) the disconnection by the movement of any isolater, breaker or switch or the removal of any fuse or link by which no **electricity** can flow,

at the Point of Connection and **de-energise** is to be interpreted accordingly;

Default Rate
means, in any month, the **bank bill bid rate** appearing on the first Business Day of the month plus five percent per annum, calculated daily and capitalised monthly;

Dispute Notice
has the meaning specified in clause 21.3(a);

Dispute Meeting
has the meaning specified in clause 21.3(b);

Due Date
has the meaning specified in clause 11.2;

Electricity Governance Regulations
means the regulations made pursuant to subpart 2 of Part 14 of the **Act**;

Electricity Governance Rules
means the Electricity Governance Rules 2003 (including all parts and sections) and includes every schedule to the rules, any code of practice and any technical code;

Estimated Quantity
means a quantity of **electricity** that is estimated under clause 9.1(a);

Force Majeure or **an event or circumstance of Force Majeure**
means an event or circumstance described in clause 13.1(a) (b) or (c);

Good Electricity Industry Practice
means:

(a) in the case of Transpower when performing the functions of **grid owner**, the exercise of that degree of skill, diligence, prudence, foresight and economic management, as determined by reference to good international practice, which would reasonably be expected from a skilled and experienced **asset owner** engaged in the management (including maintenance) of a transmission network under conditions comparable to those applicable to the **grid** consistent with applicable Law, safety and environmental protection. The determination of comparable conditions is to take into account factors such as the relative size, duty, age and technological status of the relevant transmission network and the applicable Law; and

(b) in the case of the Customer, the exercise of that degree of skill, diligence, prudence, foresight and economic management which would reasonably be expected from a skilled

and experienced **asset owner** engaged in the conveyance, generation or consumption of **electricity** (as the case may be) under conditions comparable to those applicable to the Customer's Assets consistent with applicable Law, safety and environmental protection. The determination of comparable conditions is to take into account factors such as the relative size, duty, age and technological status of the relevant **assets** and the applicable Law;

Grid Charges
means the charges set out in Schedule 3 (Grid Charges), as varied from time to time in accordance with this Agreement;

GST
means goods and services tax payable under the GST Act (or any similar tax levied in substitution) and **GST Act** means the Goods and Services Tax Act 1985;

GST Amount
has the meaning specified in clause 11.5;

Interest Rate
means, in any month, the **bank bill bid rate** appearing on the first Business Day of the month calculated daily and capitalised monthly;

Law
means a statute, regulation, by-law or requirement of a local or territorial authority with relevant jurisdiction;

Licence Charges
means the charges payable by the Customer under Schedule 6 (Access and Occupation);

Loss
has the meaning specified in clause 20.1;

Part
means any part of this Agreement as added, amended or replaced from time to time in accordance with this Agreement or the Electricity Governance Rules;

Point of Connection
means a connection terminal on equipment forming part of the **grid assets** at which the Customer's Assets are physically connected to the **grid** and being any of the points of connection specified in Schedule 1 (Points of Connection);

Related Company
has the meaning given in the Companies Act 1993;

Schedule
means any schedule to this Agreement as added, amended or replaced from time to time in accordance with this Agreement;

Technical Compliance Obligation
means an obligation specified in clauses 33.1 or 42.1;

Transpower's Counterparty Exposure
means an amount equivalent to a total of two month's Charges based on:

(a) where the Customer has been a customer of Transpower for 12 months or more, the average monthly Charges of the Customer over the previous 12 month period provided that Transpower may (acting reasonably) adjust that total by having regard to what Charges Transpower reasonably anticipates will be payable by the Customer in the next 12 months; or

(b) where the Customer has been a customer of Transpower for less than 12 months, the expected average monthly Charges of the Customer over the next 12 months based on:

(1) an estimate by Transpower (acting reasonably) having regard to its historical records of the consumption of other relevant Transpower customers and what Transpower reasonably anticipates will be payable by the Customer in the next 12 months; or

(2) where there are no other relevant Transpower customers with which to compare, an amount that Transpower reasonably anticipates will be payable by the Customer in the next 12 months.

6. DEFINITIONS IN ELECTRICITY GOVERNANCE RULES AND ELECTRICITY GOVERNANCE REGULATIONS

6.1 Electricity Governance Rules and Electricity Governance Regulations Definitions:

Any terms used in this Agreement which are defined in the Electricity Governance Rules or Electricity Governance Regulations, but which are not defined in this Agreement, have the same meaning as in the Electricity Governance Rules or Electricity Governance Regulations, as the case may be.

6.2 Bold terms

For ease of reference only, terms defined in the Electricity Governance Rules or Electricity Governance Regulations that are not defined in the Agreement are in bold.

7. INTERPRETATION

In this Agreement unless the context otherwise requires:

7.1 Parts and Schedules:

if there is a reference in any provision to a Part (e.g. "Part B: Point Connection" or "Part D: Losses and Constraint Excess Payments") that is not a Part of this Agreement, the provision is to be read as if the reference was not there, except where the reference is to a part of the Electricity Governance Rules;

7.2 **Inconsistency:**

if any provision in a Part or Schedule is inconsistent or conflicts with any clause in Part A: Foundation, Part A1: Glossary and Interpretation or Part A2: General Terms, the provision in the Part or Schedule (as the case may be) will prevail;

7.3 **Including:**

"including" and similar words do not imply any limitation;

7.4 **Headings:**

headings are for ease of reference only and are to be ignored in the interpretation of this Agreement;

7.5 **Gender and Plural:**

words importing one gender include the other gender and words importing the singular number include the plural and vice versa;

7.6 **Parties:**

references to a party or a person include any form of entity and their respective successors, permitted assignees or transferees;

7.7 **Dollars:**

all amounts are in New Zealand dollars and are expressed exclusive of GST;

7.8 **Negative Obligations:**

any obligation not to do anything is deemed to include an obligation not to suffer, permit or cause that thing to be done;

7.9 **Statutes, Regulations:**

references to a statute include references to regulations, orders or notices made under such statute, and all amendments to, or substitutions for, such statute;

7.10 **Documents:**

references to a document or agreement (including the Electricity Governance Rules or Electricity Governance Regulations) include references to all amendments to, substitutions for or novations of that document or agreement;

7.11 **Month and Year:**

references to a month or year are references to a calendar month or a calendar year; and

7.12 **Rights:**

a right conferred by this Agreement to do any act or thing is capable of being exercised from time to time.

PART A2: GENERAL TERMS

8. CREDIT SUPPORT

8.1 **Credit Support:**

The Customer will provide credit support if required in accordance with Schedule 7 (Credit Support).

9. CALCULATION OF CHARGES

9.1 **Quantities of Electricity:**

Where any Charges are to be calculated by direct reference to a **reconciled quantity** the following provisions will apply:

(a) **Estimates**:

pending receipt of any relevant **reconciled quantity**, Transpower may estimate the quantity of **electricity** which it reasonably considers to have been conveyed and that estimate is to be used for the purposes of the relevant calculation of Charges. For the avoidance of doubt, if the Customer disputes the estimate the Customer may dispute the relevant invoice under clause 10.7; and

(b) **Reconciled Quantity Disputes**:

any dispute as to the accuracy of a **reconciled quantity** is to be determined in accordance with the Electricity Governance Regulations.

9.2 **Information:**

If Transpower reasonably requires information as to any matter from the Customer for the purpose of calculating any Charge, the Customer is to provide the information to Transpower or to the **reconciliation manager**. The Customer authorises the **reconciliation manager**, without direction or authority from the Customer, to provide to Transpower any information held by the **reconciliation manager** which Transpower reasonably requires for the purposes of calculating any Charge (provided that Transpower notifies the Customer at the time it seeks such information from the **reconciliation manager**). This clause is intended to confer a benefit on, and be enforceable by, the **reconciliation manager** under the Contracts (Privity) Act 1982. Furthermore, the Customer authorises Transpower to use any information received under this clause 9.2 for the purpose of calculating its charges to any other customer.

9.3 **Estimates:**

If the information referred to in clause 9.2 is not provided in a sufficiently timely manner for Transpower to calculate the relevant Charge and invoice the Customer in accordance with clause 10, Transpower may calculate the relevant Charge based on Transpower's reasonable estimate of the information. For the avoidance of doubt, if the

Customer disputes the estimate the Customer may dispute the relevant invoice under clause 10.7.

10. INVOICING

10.1 Invoicing:

Each month, Transpower will invoice the Customer for:

(a) **Charges**:

all Charges for the previous month; and

(b) **Other Amounts**:

any other Charges due and payable by the Customer under this Agreement (including any adjustments of prior invoices).

If it is not reasonably practicable for Transpower to invoice the Customer for all Charges for the previous month, Transpower may defer invoicing part or all of such Charges. Transpower will use reasonable endeavours to deliver an invoice to the Customer not less than five Business Days prior to the 20th day of the month.

10.2 Invoices:

Transpower may provide:

(a) **Separate or Combined Invoice**:

separate invoices for Charges payable under any Part or a combined invoice for Charges payable under some or all Parts; and

(b) **Multiple invoices**:

more than one invoice for Charges payable under any Part.

10.3 Contents of Invoice:

Each invoice or accompanying credit note is to:

(a) **GST Invoice**:

specify any GST Amount payable by the Customer under clause 11.5 and comply with the GST Act;

(b) **Reconciled Quantities of Electricity**:

where an amount payable is calculated by direct reference to a **reconciled quantity** of **electricity**, state the quantity of **electricity** used and whether it is a **reconciled quantity** or an Estimated Quantity;

(c) **Cash Bond Interest**:

if the Customer has provided a cash bond under Schedule 7, specify the interest payable by Transpower in accordance with clause 6(d) of Schedule 7;

(d) **Component Charges Identified Separately**:

if a combined invoice for amounts payable under different Parts, separately identify the amounts payable by reference to each Part; and

(e) **Charges for Connection Locations Identified Separately**:

for each **connection location**, separately identify Charges which relate only to that **connection location**.

10.4 **Wash-up Invoices**

When:

(a) **Estimates**:

in respect of Estimated Quantities, Reconciled Quantities are made available to Transpower; or

(b) **Revised Reconciled Quantities**:

a **reconciled quantity** is revised,

Transpower will:

(c) **Undercharge**:

in the case of an undercharge, invoice the Customer under clause 10.1 for the amount of the undercharge together with interest at the Interest Rate calculated from the Due Date of the original invoice to the Due Date of the invoice showing the undercharge; and

(d) **Overcharge**:

in the case of an overcharge, send the Customer a credit note with the next invoice under clause 10.1 for the amount of the overcharge together with interest at the Interest Rate calculated from the Due Date of the original invoice to the Due Date of that next invoice. If the amount of the overcharge plus interest exceeds the amount of the Charges due that month, Transpower will pay to the Customer such excess amount on or before the Due Date of that next invoice.

10.5 **Incorrect Invoices:**

Except where clause 10.4 applies, if within 24 months from the date of any invoice Transpower discovers that it has overcharged or undercharged the Customer (whether because it has incorrectly calculated any Charge or because it has used an incorrect input when calculating a Charge), Transpower will:

(a) **Undercharge**:

in the case of an undercharge, invoice the Customer under clause 10.1 for the amount of the undercharge together with interest at the Interest Rate calculated from the Due Date of the incorrect invoice to the Due Date of the invoice showing the undercharge (provided that if the undercharge was due to incorrect information provided by the Customer, interest shall be at the Default Rate); and

(b) **Overcharge**:

in the case of an overcharge, send the Customer a credit note together with the next invoice under clause 10.1, for the amount of the overcharge together with interest at the Default Rate calculated from the Due Date of the incorrect invoice to the Due Date of that next invoice (provided that if the overcharge was due to incorrect information provided by the Customer, interest shall be at the Interest Rate). If the amount of the overcharge plus interest exceeds the amount of the Charges due that month, Transpower will pay to the Customer such excess amount on or before the Due Date of that next invoice.

10.6 **Manifest Error In Invoice:**

If the Customer considers that there is a manifest error in an invoice and gives Transpower not less than five Business Days notice of the alleged error prior to the Due Date, Transpower must use reasonable endeavours to investigate whether there is a manifest error and notify the Customer before the Due Date whether it agrees (acting reasonably) that there is a manifest error and the invoice requires correction.

If:

(a) Transpower notifies the Customer that it agrees that there is a manifest error requiring correction, it will re-invoice the Customer and, without prejudice to the Customer's rights to dispute the new invoice under clause 10.7(b), clause 11 will apply to payment of the new invoice, provided that the Due Date will be five Business Days from the date that the new invoice is received by the Customer, and the Customer will not be liable to pay the sum specified in the incorrect invoice;

(b) Transpower notifies the Customer that it does not agree that there is a manifest error requiring correction, clause 11 will apply to payment of the invoice and (if the Customer wishes) the Customer may notify Transpower of a dispute pursuant to clause 10.7(b);

(c) Transpower has not notified the Customer before the Due Date either that it agrees or disagrees that there is a manifest error requiring correction, that invoice will not be payable provided that if the Customer subsequently receives notice from Transpower that it:

(1) agrees that there is a manifest error requiring correction, clause 10.6(a) will apply; or

(2) disagrees that there is a manifest error requiring correction, the Due Date for that invoice will be five Business Days from the date the Customer receives such notice and the Customer may notify Transpower of a dispute pursuant to clause 10.7(b).

10.7 **Disputed Invoices:**

Subject to clause 10.6, if the Customer disputes any matter relating to an invoice, the Customer must:

(a) **Continuing Obligation to Pay**:

pay the full amount of the disputed invoice in accordance with clauses 11.1, 11.2 and 11.3; and

(b) **Notice**:

within 24 months from the date of receipt of the invoice, notify Transpower of the dispute, including the grounds of dispute, in accordance with clause 21.3. Payment of a disputed invoice in accordance with clause 11.1 is without prejudice to the Customer's right to notify a dispute under this clause 10.7(b) or to raise any arguments in relation to such dispute.

10.8 **Payment Following Dispute Resolution:**

If, as a result of a dispute notified pursuant to clause 10.7, it is agreed or determined that Transpower has overcharged or undercharged the Customer, the procedure for undercharges or overcharges (as the case may be) in clause 10.5 will apply.

10.9 **Waiver of Right to Dispute or to Invoice an Undercharge:**

(a) **Disputed Invoice:**

The Customer will be deemed to have waived its right to dispute any invoice if the Customer fails to give a Dispute Notice and provide details of the grounds for the dispute as specified in clause 21.3 within 24 months from the date of the disputed invoice.

(b) **Undercharge:**

Transpower will be deemed to have waived its right to invoice the Customer for any undercharged amount if Transpower fails to invoice the amount of the undercharge as specified in clause 10.5(a) within 24 months from the date of the incorrect invoice.

11. PAYMENT

11.1 Payment:

The Customer must pay to Transpower the full amount of any invoice sent in accordance with this Agreement. No deduction from the amounts invoiced may be made, except that if the Customer has received a credit note from Transpower with the invoice, the Customer may deduct the amount of the credit note from the amount payable under the invoice. For the purposes of this clause 11.1, "deduction" means any legal or equitable set off, and/or any legal or equitable counterclaim, and/or any cross-demand and/or any other legal or equitable claim and/or any disputed amount.

11.2 Date for Payment:

Any invoice under this Agreement must be paid in full on or before the Due Date. Except as otherwise provided in this Agreement, “Due Date” means the later of:

(a) the 20th day of the month in which the invoice is issued or the next Business Day if the 20th day of the month is not a Business Day; and

(b) five Business Days from the date the invoice is received by the Customer (including the day of receipt as the first Business Day if the invoice is received prior to 10.00 am on a Business Day).

11.3 Time for Payment:

If the Customer makes payment of an amount:

(a) **Electronic Payment**:

by electronic transfer of funds:

(1) the payment must be credited to Transpower's designated bank account (as provided by Transpower under rule 3.1.3.2(b) or 3.1.6.2, section II, part F of the Electricity Governance Rules) by midnight on the Due Date; and

(2) the Customer is to notify Transpower of any payment by electronic transfer of funds prior to 10.00 am on the day of transfer;

or

(b) **Other Means of Payment**:

by any other means, the payment must be made before 2.00 pm on the Due Date and the Customer is by the same time to notify Transpower of the payment and the invoice to which it relates.

11.4 **Default Interest:**

If the Customer fails to pay the full amount of any invoice which is due in accordance with this Agreement on or before the Due Date, the Customer must pay interest calculated at the Default Rate on the amount unpaid from the Due Date until the date payment is received by Transpower, such interest to accrue after, as well as before, judgment, award or determination.

11.5 **GST Amount:**

In addition to any amounts payable under this Agreement, the Customer is to pay Transpower an amount equal to any GST for which Transpower is liable in respect of the supply to which such payments relate (the "GST Amount"). The GST Amount is due and payable by the Customer at the same time as the payment in respect of which it is payable is due under this Agreement.

12. PARTIES TO PROVIDE INFORMATION

12.1 **Information Required by Transpower or the Customer:**

Without limiting any other provision of this Agreement, each party is to provide the other party (the "Requesting Party") with any information and within such time as the Requesting Party may reasonably require for the purposes of performing its obligations under this Agreement, or its obligations under any Law in so far as such obligations relate to the performance of this Agreement, including information about:

(a) **Assets:**

the party's **assets**;

(b) **Operation of Assets:**

the operation of the party's **assets**;

(c) **Conveyed Electricity:**

any metered quantities of **electricity** conveyed; and

(d) **Demand or Supply:**

anticipated supply of, or demand for, **electricity**.

13. FORCE MAJEURE

13.1 **Force Majeure:**

If either party fails to comply with or observe any provision of this Agreement (other than payment of any amount due) and such failure is caused by:

(a) **Specific Events or Circumstances:**

any event or circumstance occasioned by, or in consequence of, any act of God (being an event or circumstance (i) due to natural causes, directly or indirectly and exclusively without human intervention, and (ii) which could not reasonably have been foreseen or, if foreseen, could not reasonably have been resisted), strikes, lockouts, other industrial disturbances, acts of public enemy, wars, terrorism, blockades, insurrections, riots, epidemics, or civil disturbances;

(b) **Court Orders etc:**

the binding order of any court, government, regulatory body or a local authority beyond the control of the party invoking this clause 13.1; or

(c) **Other Event or Circumstance:**

any other event or circumstance beyond the control of the party invoking this clause 13.1,

and being such that, by taking reasonable precautions in accordance with Good Electricity Industry Practice, such party could not have avoided the effect of such event or circumstance, that failure does not give rise to any cause of action or liability based on default of the provision.

13.2 **Notice**:

If a party becomes aware of a serious prospect of a forthcoming Force Majeure, it must notify the other party as soon as reasonably practicable of the particulars of which it is aware. If a party invokes clause 13.1, it must notify the other party as soon as reasonably practicable of full particulars of the Force Majeure relied upon.

13.3 **Avoidance and Mitigation of Effect of Force Majeure:**

The party invoking clause 13.1 must:

(a) **Endeavour to Avoid or Overcome**:

use all reasonable endeavours to overcome or avoid the Force Majeure;

(b) **Endeavour to Mitigate**:

use all reasonable endeavours to mitigate the effects or consequences of the Force Majeure insofar as such causes the failure in respect of which clause 13.1 has been invoked; and

(c) **Consult**:

consult with the other party on the performance of the obligations referred to in clause 13.3(a) and 13.3(b).

13.4 **No Obligation to Settle:**

Nothing in clause 13.3 is to be construed as requiring a party to settle a strike, lockout or other industrial disturbance by acceding, against its judgement, to the demands of opposing parties.

14. DANGER TO PERSONS AND PUBLIC SAFETY

14.1 **Danger to Persons and Public Safety:**

Notwithstanding any other provisions of this Agreement, if Transpower considers in good faith that there is an immediate danger to persons or public safety, it may immediately and without notice to the Customer de-energise any Point of Connection or take any other steps necessary in accordance with Good Electricity Industry Practice to avoid or minimise that danger. Transpower will notify the Customer as soon as reasonably practicable of the de-energisation and the reasons for de-energisation and will re-energise the Point of Connection as soon as practicable after it becomes safe to do so.

15. CONSEQUENCES OF DEFAULT

15.1 **Non-Payment:**

If the Customer fails to pay any invoice which is due to Transpower under this Agreement in full and on or before the Due Date, the following provisions apply:

(a) **Notice:**

Transpower may give notice to the Customer stating the amount due and requiring payment.

(b) **Transpower's Rights:**

If the Customer does not pay the amount due, together with interest at the Default Rate calculated from the Due Date to the date of payment, within five Business Days from the date of receipt of the notice under clause 15.1(a), Transpower may, without prejudice to any other right it may have at law or under this Agreement and while the non-payment (including non-payment of interest) continues:

(1) if the non-payment relates to either Part B: Point Connection or Part C: Grid Connection, give 10 Business Days' notice of its intention to do any or all of the following:

A. de-energise all or any Points of Connection;

B. terminate Part B: Point Connection and Part C: Grid Connection in whole or in respect of any Point of Connection; and

C. terminate the whole of this Agreement,

provided that if the unpaid Charges relate only to a particular **connection location**, or particular **connection locations**, then A and B above will only apply in respect of Point(s) of Connection at such **connection location(s)** and C above will not apply,

and

(2) if the non-payment relates to any Part other than Part B: Point Connection or Part C: Grid Connection, give 10 Business Days' notice of its intention to do either or both of the following:

A. terminate that Part; or

B. terminate the whole of this Agreement.

(c) **Meet to Discuss**

As soon as practicable after a notice under clause 15.1(a) has been given, the parties will meet to discuss payment. Transpower may only act on its intention to act under clause 15.1(b)(1)A, B or C or (2)A or B following the expiry of 10 Business Days from the date of receipt of the notice by the Customer if no agreement has been reached on payment or the Customer has been unwilling to meet with Transpower prior to the expiry of the 10 Business Days.

(d) **Further Notice**

If the Customer fails to comply with any agreement reached under clause 15.1(c), then:

(1) Transpower may give a further notice under clause 15.1(b) as if the failure to comply with the agreement was a failure to pay the amount due together with interest within five Business Days from the date of receipt of the notice under clause 15.1(a); and

(2) clause 15.1(c) shall not apply in respect of such notice.

(e) **Exercise of Rights**

Subject to the proviso to clause 15.1(b)(1), Transpower may exercise its rights to terminate under clause 15.1(b)(1)B in respect of any Point of Connection notwithstanding that it may have already exercised its rights under that clause in respect of any other Point of Connection or have already exercised its rights under clause 15.1(b)(1)A, whether in respect of that or any other Point of Connection.

15.2 **Customer Technical Non Compliance:**

If the Customer fails to comply with any Technical Compliance Obligation, the following provisions apply (without prejudice to any other rights or remedies that Transpower may have at law or under this Agreement):

(a) **Immediate de-energisation:**

(1) Acting in accordance with Good Electricity Industry Practice, Transpower may immediately de-energise any Point of Connection to which the non-compliance relates for so long as it reasonably considers that the non-compliance is likely to have a material adverse effect on:

A. the power quality or security of the **grid**;

B. the performance characteristics and/or management of the **grid**; or

C. any other Connected Party.

(2) Transpower will notify the Customer as soon as reasonably practicable of the de-energisation and the reasons for the de-energisation (including the nature of the Customer's non compliance).

(3) Where Transpower is unable to de-energise the Point of Connection to which the non-compliance relates, the Customer must de-energise the Point of Connection as soon as practicable following receipt of a notice from Transpower requiring de-energisation under this clause 15.2(a). Such notice shall include the reasons for the de-energisation (including the nature of the Customer's non-compliance).

(4) Transpower may exercise its rights under this clause 15.2(a) notwithstanding that any notice may have been given or process commenced under clause 15.2(b) or clause 15.3.

(b) **Notice of Non-Compliance:**

Transpower may give notice to the Customer specifying the non-compliance and, if Transpower does so:

(1) the Customer must remedy the non-compliance within 10 Business Days from the date of receipt of the notice; or

(2) if it is not reasonably practicable in accordance with Good Electricity Industry Practice for the Customer to remedy the non-compliance within 10 Business Days from the date of receipt of the notice, the Customer must provide Transpower with a plan (including a timetable) to remedy the non-compliance in accordance with Good Electricity Industry Practice. If Transpower does not agree with the Customer's remedial plan, the remedial plan is to be referred to an expert for determination in accordance with clause 21.6.

15.3 **De-energisation or Termination:**

If, following receipt of a notice under clause 15.2(b), the Customer:

(a) fails to remedy the non-compliance or to provide Transpower with a remedial plan within 10 Business Days from the date of receipt of the notice; or

(b) fails to remedy the non-compliance in accordance with the remedial plan (as agreed or determined),

then while the failure continues Transpower may give 10 Business Days' notice of its intention to do any or all of the following:

(c) de-energise any Point of Connection to which the non-compliance relates; or

(d) terminate Part B: Point Connection and Part C: Grid Connection in relation to any Point of Connection to which the non-compliance relates.

As soon as practicable after such a notice has been given, the parties must meet and:

(e) if clause 15.3(a) applies, negotiate in good faith as to the steps the Customer will take to remedy the non-compliance having regard to Good Electricity Industry Practice; or

(f) if clause 15.3(b) applies, in good faith seek to identify the reasons why the Customer has not complied with the remedial plan and negotiate any necessary changes to the remedial plan.

Transpower may only act on its notice of intention following the expiry of 10 Business Days from the date of receipt of the notice by the Customer if no agreement can be reached on the matters described in clauses 15.3(e) or (f) (as applicable) or the Customer has been unwilling to meet with Transpower before the expiry of 10 Business Days. If the Customer fails to comply with any agreement reached under clauses 15.3(e) or (f) Transpower may by giving not less than 10 Business Days' notice, do all or any of the following:

(g) de-energise any Point of Connection to which the non-compliance relates; or

(h) terminate Part B: Point of Connection and Part C: Grid Connection in relation to any Point of Connection to which the non-compliance relates.

Transpower may exercise any of its rights under this clause 15.3 to de-energise or terminate any Point of Connection notwithstanding that it has also exercised any or all of those in respect of that or any other Point of Connection.

15.4 **Re-energisation:**

Where Transpower has exercised its rights under clause 15.2(a) or 15.3 to de-energise a Point of Connection and the Customer remedies the failure that gave rise to Transpower exercising such rights, Transpower will re-energise that Point of

Connection as soon as practicable following receipt of a notice from the Customer that it has remedied such failure.

15.5 **Transpower Technical Non-Compliance:**

If Transpower fails to comply with any Technical Compliance Obligation, the following provisions apply:

(a) **Notice:**

The Customer may give notice to Transpower specifying the non-compliance.

(b) **Customer's Rights:**

If Transpower does not remedy or remove the non-compliance within 10 Business Days from the date of receipt of the notice specifying the non-compliance, the Customer may, without prejudice to any rights it may have at law or under this Agreement (including the dispute resolution procedures under clause 21) terminate Part B: Point Connection and Part C: Grid Connection in relation to any Point of Connection to which the non-compliance relates.

(c) **Equitable Relief**:

Notwithstanding clause 15.5(b), Transpower:

(1) acknowledges that termination under clause 15.5(b) will not be an adequate remedy for Transpower's failure to comply with a Technical Compliance Obligation if there are no alternative transmission service providers; and

(2) agrees that the Customer will (without prejudice to any rights it may have in law or under this Agreement) be entitled to equitable relief, including specific performance, in the event of a failure by Transpower to remedy or remove the non-compliance within 10 Business Days from the date of receipt of the notice specifying the non-compliance.

16. CONSEQUENCES OF DE-ENERGISATION

If Transpower de-energises a Point of Connection at a **connection location** in accordance with this Agreement:

(a) **Customer's Continuing Obligations**:

the de-energisation will not relieve the Customer of any obligation to pay any continuing Charges in relation to the remaining Point(s) of Connection at the **connection location**;

(b) **Recalculation of Grid Charges:**

Transpower is to recalculate the Grid Charges for the relevant **connection location** with effect from the date of such de-energisation;

(c) **Indemnity**:

if the de-energisation is effected at the Customer's request or due to a breach by the Customer of its obligations under this Agreement, the Customer fully indemnifies Transpower for all Transpower's reasonable direct costs resulting from the de-energisation; and

(d) **Disclosure**:

Transpower and the Customer are relieved from any obligation of confidentiality owed to the other party (whether under this Agreement or otherwise) not to disclose the fact of the de-energisation or the reason for the de-energisation (including, where the de-energisation arises as a result of the direction of any third party, both the fact of the direction and the circumstances giving rise to such direction).

17. TERMINATION BY CUSTOMER ON NOTICE

Subject to clause 19.1, the Customer may at any time terminate Part B: Point Connection and Part C: Grid Connection in whole or in respect of any Point of Connection by giving Transpower not less than six months notice of termination.

18. TERMINATION FOR INSOLVENCY OR ILLEGALITY

Either party may terminate this Agreement immediately by notice to the other party if:

(a) **Liquidation**:

the other party enters into liquidation, except for the purposes of a solvent reconstruction or amalgamation which is on terms previously approved in writing by the first party (not to be unreasonably withheld); or

(b) **Compromise**:

except as previously approved in writing by the first party, the other party enters into any compromise, arrangement or assignment with, or for the benefit of, its creditors whether approved by the Court or not; or

(c) **Statutory Management, Receivership or Administration**:

a statutory manager is appointed under the Corporations (Investigation and Management) Act 1989 to the other party or a receiver and/or manager or administrator is appointed to the whole or a material part of the other party's property; or

(d) **Insolvency**:

the other party is unable to pay its debts as they fall due in the normal course of business or where the value of the other party's assets is less than the value of its liabilities, including contingent liabilities; or

(e) **Other**:

the other party is not a company and it is the subject of an event reasonably analogous to any event described in clauses 18(a) to (d); or

(f) **Illegality**:

despite the operation of clause 24.4, it becomes illegal for either party to perform any provision of this Agreement to an extent which is material but:

(1) subject to either party having first given notice and the parties having met and considered any practical basis on which this Agreement might be varied; and

(2) provided that a party may not invoke this clause 18(f) if the illegality arises as a result of a failure by that party to meet its obligations under this Agreement or to comply with Good Electricity Industry Practice.

19. GENERAL PROVISIONS CONCERNING TERMINATION

19.1 Condition of Termination by Customer:

Any termination by the Customer of Part B: Point Connection and Part C: Grid Connection, whether in whole or in respect of any Point of Connection, will not be effective unless and until:

(a) **Disconnection**:

the Customer causes the Customer's Assets to be disconnected from the **grid** or, if the termination is in respect of any Point of Connection, causes the Customer's Assets at that Point of Connection to be disconnected from the **grid**; or

(b) **Terms**:

the Customer and Transpower agree terms for connection to the **grid** as a replacement for Part B: Point Connection and Part C: Grid Connection (including general terms) or a default **transmission agreement** applies in accordance with rule 3.1.6 of section II of part F of the Electricity Governance Rules.

19.2 Termination of a Point of Connection:

Where Part B: Point Connection and Part C: Grid Connection are terminated in respect of any Point of Connection at a **connection location**:

(a) **Schedules Amended**:

Schedule 1 (Points of Connection) and Schedule 2 (Points of Service) are deemed to be amended accordingly with effect from such termination;

(b) **Recalculation of Grid Charges**:

Transpower is to recalculate the Grid Charges for the **connection location** (omitting the terminated Point of Connection) with effect from the date of such termination; and

(c) **Transpower to Forward Revised Schedules**:

within 20 Business Days from the date of such termination, Transpower is to forward to the Customer a revised Schedule 1 (Points of Connection), a revised Schedule 2 (Points of Service), and a revised Schedule 3 (Grid Charges), as necessary.

19.3 **Consequences of Termination:**

If Part B: Point Connection and Part C: Grid Connection terminate in whole or in respect of any Point of Connection (for any reason in accordance with this Agreement), then, as a provision which survives such termination, Transpower may:

(a) **Termination in Whole:**

if Part B: Point Connection and Part C: Grid Connection terminate in whole, do any or all of the following:

(1) de-energise any or all Points of Connection; and

(2) disconnect the Customer's Assets from any or all Points of Connection;

and

(b) **Termination in Respect of a Point of Connection:**

if Part B: Point Connection and Part C: Grid Connection terminate in respect of any Point of Connection, do any or all of the following:

(1) de-energise each such Point of Connection; and

(2) disconnect the Customer's Assets from the **grid** at each such Point of Connection.

Clauses 19.3(a) and 19.3(b) will not apply in relation to any Point of Connection in respect of which Transpower and the Customer agree, prior to the termination taking effect, terms for connection to the **grid** as a replacement for Part B: Point Connection and Part C: Grid Connection (including general terms).

19.4 **Termination of Part A etc:**

If Part B: Point Connection and Part C: Grid Connection have terminated in respect of all Points of Connection and there are no other Parts of this Agreement in force, the whole of this Agreement will be deemed to be terminated.

19.5 **Rights not Affected by Termination:**

Termination of this Agreement or of any Part, whether in whole or in respect of any Point of Connection, (for any reason in accordance with this Agreement) will not of itself affect:

(a) **Liability for Preceding Default**:

a liability of either party for any preceding default, including any default which gave rise to termination;

(b) **Indemnity**:

any indemnity given by either party to the other under this Agreement for any liability arising under such indemnity prior to, or that relates to or results from, termination, irrespective of whether or not any claim has been made under the indemnity prior to termination;

(c) **Recovery of Amount Due**:

the right of either party to recover from the other party any amount which is or may become due to it under this Agreement; and

(d) **Rights and Remedies**:

any other rights and remedies to which either party would otherwise be entitled, whether under this Agreement, at law, at equity or otherwise,

subject in each case to clause 20.

19.6 **Certain Provisions Survive Termination:**

Termination of this Agreement for any reason will not affect clauses 19, 20, 21 and 22 or those clauses which are expressed as being intended to survive such termination.

19.7 **Limit on Right to Terminate:**

Neither Transpower nor the Customer is entitled to terminate or cancel this Agreement except as expressly provided in this Agreement.

20. LIABILITY

20.1 **Exclusion From Transpower's Liability:**

Transpower and its Associates will only be liable (in contract, tort (including negligence), equity or otherwise) to the Customer for any loss, injury, damage (in each

case whether direct, indirect or consequential) or expense (together "Loss"), if such Loss is caused by an act or omission of Transpower or its Associates which constitutes a failure by Transpower to comply with a provision of this Agreement. Transpower and its Associates will not be liable to the extent the act or omission was caused or contributed to by any default of the Customer or its Associates of its obligations under this Agreement.

20.2 **Limitation of Transpower's Liability:**

Subject to clauses 20.9 and 22.5, if Transpower or its Associates are liable to the Customer (whether in contract, tort (including negligence), equity or otherwise), other than for payment of amounts due or under any indemnity, Transpower and its Associates will only be liable for direct loss to the Customer excluding:

(a) **Loss**:

any loss of use, revenue or profit by the Customer; and

(b) **Damages**:

the amount of any damages awarded against the Customer in favour of a third party; and

(c) **Settlement Money**:

the amount of any money paid by the Customer by way of settlement to a third party; and

(d) **Costs or Expenses**:

any costs or expenses of the Customer incurred in connection with any of clauses 20.2(a), (b) or (c).

20.3 **Transpower's Capped Liability:**

Subject to clauses 20.9, 20.10 and 22.5, the combined maximum liability of Transpower and its Associates under this Agreement will be:

(a) **Single Event or Series of Related Events**:

for any single event or related series of events, five million dollars; and

(b) **12 Month Period**:

in any 12 month period a total of 20 million dollars, irrespective of the number of events.

20.4 **Contracts (Privity) Act:**

The benefits of clauses 20.1, 20.2, and 20.3 are intended to extend to Transpower's Associates and to be enforceable by each of them under the Contracts (Privity) Act 1982.

20.5 **Exclusion from Customer's Liability:**

The Customer and its Associates will only be liable (in contract, tort (including negligence), equity or otherwise) to Transpower for any Loss, if such Loss is caused by an act or omission of the Customer or its Associates which constitutes a failure by the Customer to comply with a provision of this Agreement. The Customer and its Associates will not be liable to the extent the act or omission was caused or contributed to by any default of Transpower or its Associates of its obligations under this Agreement.

20.6 **Limitation of Customer's Liability:**

Subject to clauses 20.9 and 22.5, if the Customer or its Associates are liable to Transpower (whether in contract, tort (including negligence), equity or otherwise), other than for payment of amounts due or under any indemnity, the Customer and its Associates will only be liable for direct loss to Transpower excluding:

(a) **Loss**:

any loss of use, revenue or profit by Transpower; and

(b) **Damages**:

the amount of any damages awarded against Transpower in favour of a third party; and

(c) **Settlement Money**:

the amount of any money paid by Transpower by way of settlement to a third party; and

(d) **Costs or Expenses**:

any costs or expenses of Transpower incurred in connection with any of clauses 20.6(a), (b) or (c).

20.7 **Customer's Capped Liability:**

Subject to clauses 20.9 and 22.5, the combined maximum liability of the Customer and its Associates will be:

(a) **Single Event or Series of Related Events**:

for any single event or related series of events, five million dollars; and

(b) **12 Month Period**:

in any 12 month period a total of 20 million dollars, irrespective of the number of events.

20.8 **Contracts (Privity) Act:**

The benefits of clauses 20.5, 20.6, and 20.7 are intended to extend to the Customer's Associates and to be enforceable by each of them under the Contracts (Privity) Act 1982.

20.9 **Wilful Breach or Fraud:**

The limits on liability in clauses 20.2, 20.3, 20.6 and 20.7 will not apply to a party for any wilful breach or fraud by that party.

20.10 **Consumer Guarantees Act 1993:**

(a) Transpower fully indemnifies the Customer against all loss, damage, liability, claims or expense suffered or incurred by the Customer that arises under the Consumer Guarantees Act 1993 to the extent caused by any breach of this Agreement by Transpower (except to the extent the loss, damage, liability, claim or expense was due to a failure by the Customer to comply with clause 20.10(c)).

(b) The limit on liability in clause 20.3 will not apply to any liability under this clause 20.10.

(c) The Customer shall include a provision in any agreement with a consumer to exclude the Consumer Guarantees Act 1993 where the consumer acquires services from the Customer for the purposes of a business.

21. DISPUTE RESOLUTION

21.1 **Exceptions:**

This clause 21 will not apply to:

(a) **Non-payment:**

actions for non-payment of invoices or demands; or

(b) **Reconciled Quantities:**

disputes as to **reconciled quantities** of **electricity**; or

(c) **Other:**

(1) disputes under the Electricity Governance Regulations or the Electricity Governance Rules; or

(2) disputes in relation to which the Electricity Governance Regulations or the Electricity Governance Rules sets out a dispute resolution process, including a dispute covered by rule 3.1.3.5 or rule 3.1.6.6 of section II of part F of the Electricity Governance Rules.

(d) **Transmission Pricing Methodology:**

matters arising under the **transmission pricing methodology** which are to be determined by an independent expert under the **transmission pricing methodology**.

21.2 **Management and Resolution of Disputes Between the Parties:**

The provisions of this clause 21.2 will apply to all disputes between the parties in relation to this Agreement:

(a) **Amicable resolution**:

the parties acknowledge that they are in a long-standing business relationship and recognise the importance of resolving disputes arising out of this Agreement between them quickly and cost effectively;

(b) **Interest Based**:

disputes will be resolved by focusing on the interests of both parties to achieve an agreed solution;

(c) **Reasonable Efforts**:

the parties will use all reasonable endeavours to resolve any dispute;

(d) **Obligation to Resolve Remains**:

the parties are to continue to seek to resolve any dispute by consultation and negotiation whether or not any dispute is referred for mediation, expert determination, arbitration, litigation or is referred to the **Rulings Panel**;

(e) **Continued Performance**:

pending resolution of any dispute, the parties are to continue to perform their obligations under this Agreement; and

(f) **Agreement**:

any agreement to resolve any dispute is to be in writing and signed by each party.

21.3 **Dispute Notice and Meeting:**

The following provisions of this clause 21.3 will apply to any dispute in relation to this Agreement:

(a) **Dispute Notice**:

the party claiming a dispute is to give prompt and early notice of the dispute to the other party (the "Dispute Notice") and will provide the grounds for the dispute within five Business Days from the date of receipt of the Dispute Notice. The party receiving the Dispute Notice is to give a response notice within five Business Days from the date of receipt of the grounds for the dispute;

(b) **Dispute Meeting**:

the parties are to meet within 15 Business Days from the date of receipt of the Dispute Notice (the "Dispute Meeting"). At the Dispute Meeting, the parties are to seek to:

(1) identify and agree the interests of each party;

(2) identify and isolate the issues between the parties;

(3) where possible, resolve the dispute;

(4) if the parties cannot resolve the dispute, identify whether any further information is required by either party and agree a time within which the information will be provided; and

(5) if not otherwise provided in this Agreement,

determine the most appropriate method for resolving the dispute. Such methods may include:

(6) negotiation;

(7) non-binding neutral evaluation by a third party;

(8) expert determination;

(9) mediation;

(10) arbitration;

(11) litigation; or

(12) any other method agreed between the parties;

(c) **Timetable**:

at the Dispute Meeting, the parties must agree a timetable to endeavour to resolve the dispute. Where practicable, the timetable is to provide for the dispute to be resolved within six weeks from the date of the Dispute Meeting unless the dispute is to be resolved by litigation;

(d) **No Agreement on Dispute Process**:

if the parties cannot reach agreement at the Dispute Meeting on the method for resolving the dispute then either party may refer the dispute to arbitration. The provisions of clause 21.5 will apply to any such arbitration;

(e) **Dispute Process Breaks Down**:

except in the case of arbitration, expert determination or litigation, if a process for resolving a dispute is agreed but a party considers that the agreed process has

broken down, then the party may refer the dispute to arbitration. The provisions of clause 21.5 will apply to any such arbitration; and

(f) **Refusal to meet:**

if, following receipt of a Dispute Notice, either party refuses to meet or for any other reason the parties fail to have a Dispute Meeting within 15 Business Days from the date of receipt of the Dispute Notice and the dispute remains unresolved, then either party may refer the dispute to arbitration. The provisions of clause 21.5 will apply to any such arbitration.

21.4 **Mediation:**

Where the parties agree that a dispute is to be referred to mediation, the provisions of this clause 21.4 will apply:

(a) **Appointment of Mediator**:

the parties are to agree the appointment of a mediator within five Business Days from the date of the Dispute Meeting;

(b) **Default Appointment**:

if a mediator is not appointed under clause 21.4(a), either party may request the president for the time being of the Arbitrators' and Mediators' Institute of New Zealand Incorporated to appoint the mediator;

(c) **Mediator to Settle Procedures**:

the mediator is to consult with the parties to settle the timetable and procedures to be adopted during the mediation within five Business Days from the date of the mediator’s appointment. The mediator may call any meeting between the parties at such times and places as the mediator considers appropriate. The mediation must be held within 25 Business Days from the date of the mediator's appointment;

(d) **Parties to Attend Meetings**:

the parties are to attend all meetings called by the mediator and use all reasonable endeavours to assist the mediation;

(e) **Legal Representation**:

the parties may have the assistance of legal counsel;

(f) **Without Prejudice**:

the mediation is to be conducted on a "without prejudice" basis. The mediation will not affect the rights, or prejudice the position, of the parties to the dispute in any subsequent proceedings of any kind;

(g) **Mediator has no Power of Decision**:

the mediator has no power of decision on any matters;

(h) **Mediator's Costs to be Borne Equally**:

the mediator's costs are to be paid equally by the parties and the parties will be jointly and severally liable to the mediator for such costs. This clause 21.4(h) confers a benefit or right on the mediator and is intended to be enforceable by the mediator under the Contracts (Privity) Act 1982; and

(i) **Parties' Costs of the Mediation**:

each party will bear its own costs and expenses (including legal costs on a solicitor-client basis).

21.5 **Arbitration:**

Where the parties agree that a dispute is to be referred to arbitration, or a party refers a dispute to arbitration under any provision of this Agreement, the dispute will be referred to arbitration in accordance with the Arbitration Act 1996 and the provisions of this clause 21.5 will apply:

(a) **Single Arbitrator**:

the arbitration is to be conducted by a single arbitrator;

(b) **Appointment of Arbitrator**:

the parties are to agree the appointment of the arbitrator within five Business Days from the date of the Dispute Meeting;

(c) **Default Appointment**:

if an arbitrator is not appointed under clause 21.5(b), either party may request the president for the time being of the Arbitrators' and Mediators' Institute of New Zealand Incorporated or his or her nominee to appoint the arbitrator;

(d) **Notice of Appointment**:

the arbitrator is to give the parties notice of his or her appointment;

(e) **Final and Binding**:

the award in the arbitration will be final and binding upon the parties;

(f) **Give Reasons**:

the arbitrator is to provide reasons for any award made;

(g) **Costs**:

unless the parties otherwise agree, costs are to be determined by the arbitrator's final award; and

(h) **Interim Payment of Arbitrator's Costs**:

pending the final award, the fees and expenses of the arbitrator, including hire fees and facilities expenses, are to be paid equally by the parties and the parties will be jointly and severally liable to the arbitrator for such fees and expenses. This clause 21.5(h) confers a benefit or right on the arbitrator and is intended to be enforceable by the arbitrator under the Contracts (Privity) Act 1982.

21.6 **Expert Determination:**

Where the parties agree, or this Part requires, that a dispute is to be referred to an independent expert, the provisions of this clause 21.6 will apply:

(a) **Appointment of Expert**:

the parties are to agree on the appointment of an expert within five Business Days from the date of the Dispute Meeting;

(b) **Default Appointment**:

if an expert is not appointed under clause 21.6(a), either party may request the president for the time being of the New Zealand Law Society to make the appointment;

(c) **Notice of Appointment as Expert**:

the expert is to give the parties notice of his or her appointment;

(d) **Representations**:

the expert is to invite the parties to submit such representations as the parties wish to make within 10 Business Days from the date of receipt of the expert's notice of appointment. The expert is to take into account any representations submitted by the parties but is not limited or fettered by them in any way;

(e) **Expert not Arbitrator**:

the expert is to act as an expert and not as an arbitrator and, accordingly, the Arbitration Act 1996 does not apply;

(f) **Inspection of Records**:

the expert may inspect any relevant records kept by a party in relation to this Agreement at any reasonable time provided that:

(1) a party is not obliged to provide records for inspection where to do so will breach an obligation owed by that party to a third party or is contrary to law; and

(2) each party is to use reasonable endeavours to obtain any consent necessary to disclose information requested by the expert;

(g) **Rely on Own Judgement**:

the expert is entitled to rely on his or her own judgement and opinion;

(h) **Give Reasons**:

the expert is to provide the reasons for any determination within six weeks from the date of the expert's appointment or within such extended period as the parties may agree. The expert is not to release any determination to the parties until the expert's fees and expenses are paid;

(i) **Binding Determination**:

the expert's determination will be final and binding upon the parties;

(j) **Replacement of Expert**:

if the expert does not make a determination within six weeks from the date of his or her appointment (or within the time agreed by the parties), or relinquishes his or her appointment, or dies, or for any other reason is unable to complete the determination, another expert will be appointed. This clause 21.6 will apply in relation to that appointment;

(k) **Expert's fees**:

the expert's fees and expenses will be paid equally by the parties or as agreed or determined under clause 21.6(l) or (m) respectively, and the parties will be jointly and severally liable to the expert. This clause 21.6(k) confers a benefit or right on the expert and is intended to be enforceable by the expert under the Contracts (Privity) Act 1982;

(l) **Costs**:

the parties are to agree which party will pay the costs of the expert determination, including each party's costs and the expert's fees and expenses, within 10 Business Days from the date receipt of the determination; and

(m) **Expert to Determine Costs**:

if the parties do not agree costs under clause 21.6(l), the expert is to determine such costs, fees and expenses. The expert may invite the parties to make submissions on costs in such manner as determined by the expert. The parties will be bound by the expert's determination as to costs.

22. CONFIDENTIALITY

22.1 **Confidentiality:**

(a) Except as expressly provided otherwise in this Agreement, each party is to keep confidential and only use for the purposes of this Agreement any information provided by or on behalf of the other party relating to this Agreement which has been specified by such party as being confidential information, and not disclose such information to any other person without the prior written consent of the other party, which is not to be unreasonably withheld.

(b) Each party acknowledges that information it receives from the other party may be or become "inside information" as defined by the Securities Markets Act 1988 and/or "Material Information" as defined by the New Zealand Exchange Limited Listing Rules. Neither party shall use any such information in any way or otherwise do anything which could breach the Securities Markets Act 1988 or the New Zealand Exchange Limited Listing Rules or could result in the other party or any of its Related Companies or any of its or their shareholders, officers, employees or advisers incurring any liability under the Securities Markets Act 1988 or the New Zealand Exchange Limited Listing Rules. In particular neither party shall, or shall cause or permit any person to whom it has disclosed the inside information and/or Material Information to, buy or sell or otherwise deal in shares in the other party or advise or encourage any other person to do so until all such information ceases to be inside information and/or Material Information.

22.2 **Exceptions:**

Clause 22.1 is not to apply to the disclosure of any information by a party:

(a) **Associates**:

to its Associates or Related Companies where necessary for the ordinary business purposes of that party;

(b) **Banks, etc.**:

to any bank, financial institution or rating agency from which the party is seeking to obtain or maintain financial facilities or a credit rating in connection with that party's business;

(c) **Assignee**:

to a bona fide intending assignee who has signed a confidentiality agreement in favour of the party whose information is being disclosed;

(d) **As Required by Law or Stock Exchange**:

to any person to whom that party reasonably believes it is required to disclose to by law or to meet the listing requirements of any stock exchange;

(e) **Industry Agreements**:

to any person to whom that party reasonably believes it is required to disclose to so as to comply with (including the exercise of any rights under) the Electricity Governance Regulations or the Electricity Governance Rules and, in the case of Transpower, to any person to whom it reasonably believes it is required to disclose to so as to comply with (including the exercise of any rights under) any contract or deed for the provision of services for the purposes of the Electricity Governance Regulations or the Electricity Governance Rules;

(f) **Disputes**:

in any mediation, arbitration, adjudication or legal proceeding of any kind arising out of or in connection with this Agreement or otherwise in compliance with the order of any court of competent jurisdiction;

(g) **Public Domain**:

to the extent that the information at the time of disclosure was, or subsequently has become, generally available to the public other than as a result of unauthorised disclosure by that party or any of its Associates;

(h) **Already Known**:

to the extent that the information was already known to a party at the time of disclosure and came into that party's possession otherwise than by breach of any confidentiality obligation owed to any other party or the information was disclosed to a party on a non-confidential basis by a third party who was not bound by any confidential obligation;

(i) **System Operator**:

to the System Operator to the extent required for performance of its functions;

(j) **Transpower Termination or De-energisation:**

in the relevant circumstances where Transpower is acting under clauses 14.1, 15.1(b), 15.2, 15.3 or 19.3; and

(k) **Customer Termination:**

in the relevant circumstances where the Customer is acting under clause 15.5.

22.3 **Disclosure on Aggregated Basis:**

Transpower may disclose confidential information to any person where the information has been developed into aggregated statistical data and such disclosure will not in a material manner commercially disadvantage the Customer.

22.4 **Associates:**

Each party is to ensure that its Associates or Related Companies who are in possession of any confidential information under clauses 22.2(a), 22.2(b), 22.2(c), 22.2(f) observe and comply with these confidentiality provisions and is responsible to the other party for any acts and omissions of its Associates or Related Companies in relation to the confidential information.

22.5 **Liability:**

The limits on liability in clauses 20.2, 20.3, 20.6 and 20.7 shall not apply to any breach by a party of its obligation under this clause 22 or clause 12 of schedule 7.

22.6 **Survive Termination:**

The whole of this clause 22 is to survive termination of this Agreement.

23. ASSIGNMENT

23.1 **Assignment:**

Neither party may assign, transfer or otherwise dispose of the whole or any part of its interest or obligations under this Agreement without the other party's prior written consent, not to be unreasonably withheld.

23.2 **Release:**

If either party assigns or transfers the whole of its interest or obligations under this Agreement in accordance with clause 23.1 the party assigning or transferring its interest will be relieved and released from its obligations and any liability under this Agreement except for any obligations or liability arising prior to the date of the assignment or transfer.

23.3 **Deemed Assignment:**

Except in the case of a party who is an issuer listed on the New Zealand Stock Exchange or a recognised overseas exchange, there is deemed to be an assignment of a party's interest in this Agreement in breach of clause 23.1 if, without the prior approval of the other party (not to be unreasonably withheld), by transfer or allotment of shares or amendment of its company constitution or by some other act or deed, the effective control of a party changes or passes to any person not having effective control as at the date of this Agreement.

24. GENERAL LEGAL TERMS

24.1 **No Partnership, etc.:**

This Agreement does not constitute either party as an agent or legal representative of the other or employee or servant of the other for any purpose nor does this Agreement deem to establish a joint venture or partnership.

24.2 **No Representation:**

The Customer acknowledges that it is not entering into this Agreement on the basis of any representation or warranty made by Transpower which is not expressly set out in this Agreement.

24.3 **Amendments:**

Except as expressly provided in this Agreement, there is to be no amendment to any of the provisions of this Agreement except by a supplementary written agreement signed by the parties.

24.4 **Severability:**

If any of the provisions of this Agreement are held by a court or tribunal of competent jurisdiction to be unenforceable, then that provision will be severed from this Agreement and immediately replaced with a valid enforceable provision as similar as possible to the severed provision.

24.5 **Waiver:**

No waiver, extension or excuse (as the case may be) will be deemed to arise unless it is in writing and signed by the relevant party providing it.

24.6 **No Third Party Rights:**

Except as expressly provided in this Agreement, the parties do not intend to create rights in or grant remedies to any third party as a beneficiary of this Agreement and all provisions contained in this Agreement are for the sole and exclusive benefit of the parties.

24.7 **Further Acts:**

Each party agrees that it will from time to time sign, execute, procure, pass and do all such further documents, acts, matters, resolutions and things within its power as may reasonably be necessary to effect the provisions of this Agreement.

24.8 **Applicable Law:**

This Agreement is to be governed by and interpreted in accordance with the laws of New Zealand and the parties hereto irrevocably submit to the non-exclusive jurisdiction of the Courts of New Zealand.

25. NOTICES

25.1 Delivery of Notices:

Except as expressly provided otherwise, all notices or other communication required by this Agreement must be in writing and must be forwarded by personal delivery, post or facsimile to the number or address of the party set out in clause 1 or 2 (as the case may be) of Part A: Foundation or otherwise notified by that party from time to time. Subject to clause 25.2, any such notice or other communication will be deemed to have been duly received:

(a) **Personal Delivery**:

if personally delivered, when delivered at the recipient's address;

(b) **By Post**:

if sent by post, at 9.00am on the second Business Day after posting; or

(c) **By Fax**:

if sent by facsimile, upon generation of a transmission report by the sender's facsimile machine confirming the complete and error-free transmission to the correct facsimile number for the recipient.

25.2 Not a Business Day:

Except for any notice or other communication deemed received under clause 25.1(b), if any notice or other communication is not received on a Business Day, or is not received before 10.00am on any Business Day, that notice or other communication will be deemed to have been duly received by the recipient at 9.00 am on the next Business Day.

25.3 Commencement of Notice Period:

Where this Agreement provides that an event or action take place within a specified number of Business Days from the date of receipt of any notice or other communication ("Notice Period"), the first Business Day of the Notice Period is deemed to be the day of receipt in accordance with clauses 25.1 and 25.2.

PART B: POINT CONNECTION

26. SCOPE OF POINT CONNECTION

This Part sets out the obligations of both Transpower and the Customer in relation to the physical connection of the Customer's Assets to the **grid**.

Connection of the Customer's Assets to the **grid** occurs at a Point of Connection and provides the physical means by which **electricity** can transfer between the **grid** and the Customer's Assets. The parties' rights and obligations in relation to energisation of a Point of Connection, which is necessary to effect the transfer of **electricity** between the Customer's Assets and the **grid**, are set out in Part C: Grid Connection.

27. DEFINITIONS

For the purposes of this Part B:

Equipment
includes equipment, tools, cables, machinery, lines, wires and all related materials and items;

Local Losses
means Losses applying to the conveyance of **electricity** over a Local Network;

Local Network
means lines, equipment and plant that is used to convey **electricity** between the **grid** and a **consumer** or **embedded generator** or **embedded network** who are connected to that Local Network;

Losses
means the difference between the delivered **electricity** at one Point of Connection and the **electricity** required to be injected into any other Point of Connection in order to supply the delivered **electricity**; and

Metering Information
means the quantity of **electricity** measured by a **metering installation** and adjusted for Local Losses (where relevant) to represent the equivalent amount of **electricity** at the relevant Point of Connection.

28. CONNECTION

28.1 **Connection:**

Transpower will permit the Customer to connect the Customer's Assets to the **grid** at the Points of Connection and to remain connected in accordance with this Agreement for the purpose of enabling the transfer of **electricity** between the **grid** and the Customer's Assets.

28.2 **Customer's Assets:**

The Customer must ensure that connection of the Customer's Assets to the **grid** and the maintenance and operation of the Customer's Assets and any **assets** physically connected to the Customer's Assets do not adversely affect the **grid** or Transpower's use or management of the **grid**.

28.3 **Transpower's Assets:**

Transpower must ensure that connection of the **grid** to the Customer's Assets and the maintenance and operation of the **grid** and any **assets** physically connected to the **grid** do not adversely affect the Customer's Assets or the Customer's use or management of the Customer's Assets.

29. CONNECTION CODE

29.1 **Transpower:**

Transpower must comply with the obligations on it, and may exercise its rights under, the Connection Code.

29.2 **Customer:**

The Customer must comply with the obligations on it, and may exercise its rights under, the Connection Code.

30. INFORMATION

30.1 **Information from Transpower:**

Transpower will, at the request of the Customer, provide such information to the Customer about the electrical characteristics of the **grid** and the Points of Connection, or any maintenance or operation of the **grid** or any **assets** physically connected to the **grid**, as the Customer reasonably requires for the purposes of connecting the Customer's Assets to the **grid** and keeping them connected.

30.2 **Information from Customer:**

The Customer will, at the request of Transpower, provide such information to Transpower about the electrical characteristics of the Customer's Assets and any **assets** physically connected to the Customer's Assets, or any maintenance or operation of the Customer's Assets or any **assets** physically connected to the Customer's Assets, as Transpower reasonably requires for the purposes of this Agreement.

31. ACCESS

31.1 Access and Occupation Schedule:

Where:

(a) at the Commencement Date, Equipment, and any structures related to that Equipment, that are owned or leased by the Customer are on Transpower property; and

(b) Transpower and the Customer do not have a written agreement in place in relation to access and occupation for such Equipment and structures; and

(c) such Equipment and structures are not “Existing Works” as defined in the **Act**,

then the Customer's rights of access to and over Transpower's property will be in accordance with the terms set out in Schedule 6 (Access and Occupation).

31.2 Termination of this Part:

A termination of this Part B: Point Connection operates as a termination of the rights granted to the Customer under Schedule 6 (Access and Occupation).

31.3 Termination of a Point of Connection:

A termination of this Agreement in relation to a Point of Connection operates as a termination of the rights granted under Schedule 6 (Access and Occupation) relating to that Point of Connection.

31.4 Removal of Facilities on Termination:

If the rights granted under Schedule 6 (Access and Occupation) are terminated in whole or in part in accordance with clause 31.2 or 31.3, the Customer will have six months from the date of such termination to obtain access to the relevant Facilities Area (as that term is defined in Schedule 6 (Access and Occupation)) during normal business hours and on reasonable notice being given to Transpower for the purposes of removal of the relevant Facilities (as that term is defined in Schedule 6 (Access and Occupation)). Transpower is to provide all reasonable assistance to the Customer to enable the Customer to comply with its obligations under this clause 31.4.

32. METERING INSTALLATIONS

32.1 Metering Installations:

The Customer is to ensure that a **metering installation**, measuring the flow of **electricity** between the Customer's Assets and the **grid** and complying in all respects with the testing and any other requirements in the Electricity Governance Rules in relation to the accuracy, use and installation of the **metering installation**, is provided at or near each Point of Connection. This clause does not apply in respect of a Point of Connection for so long as Transpower provides a **metering installation** at or near that

Point of Connection and the costs of providing that **metering installation** are included in the Grid Charges. Where Transpower provides a **metering installation** at or near that Point of Connection Transpower shall not cease to provide such **metering installation** without giving at least 12 months prior notice to the Customer. Metering Information derived from a **metering installation** provided:

(a) by the Customer, is the property of the Customer;

(b) by Transpower, is the property of Transpower; and

(c) jointly by Transpower and the Customer, shall be owned jointly by Transpower and the Customer. The parties jointly grant to each party a licence to use (including reproduce and distribute) such jointly owned Metering Information for that party's own business purposes without any requirement to obtain the consent of the other party.

32.2 **Certain Transpower Assets to be Made Available*:***

Transpower is to make available such of its **grid** located at or near a Point of Connection which are necessary to measure the flow of **electricity**, including secondary circuits of current and voltage transformers, for the purposes of the **metering installation** required under clause 32.1.

33. TECHNICAL COMPLIANCE OBLIGATION

33.1 **Technical Compliance Obligations:**

The obligations under clauses 28.2, 28.3, 29.1, 29.2, 30.1, 30.2, 32.1 and the Connection Code are Technical Compliance Obligations.

PART C: GRID CONNECTION

34. SCOPE OF GRID CONNECTION

This Part:

(a) relates to the provision of the Connection Assets and sets out Transpower's obligations to provide the Connection Assets and make them available for the conveyance of **electricity** to or from each Point of Connection; and

(b) relates to the provision of information by Transpower on connection and interconnection service performance.

35. DEFINITIONS

For the purposes of this Part C:

Capacity Service Levels
means the capacity service levels in Part A of Schedule 5 (Service Measures) for any or all **connection location(s)** (as the context may require);

Connection Assets
means the connection assets specified in Schedule 4 (Connection Assets);

Forecast Peak Loading
means in relation to a Customer Point of Service the maximum loading which Transpower considers is likely to arise at that Customer Point of Service as a result of the Customer's operations (whether for injection or off take of **electricity**) having regard to the combined effect of the rate of energy transfer between that Customer Point of Service and the Customer's Assets and the associated power factor, which is calculated by dividing the number of megawatts by the power factor specified in the Point of Service Schedule for that Customer Point of Service;

Interruption
means an Interruption as defined in the Electricity Governance Rules other than an Interruption by reason of Transpower exercising its rights under this Agreement to disconnect or de-energise a Point of Connection because the Customer is in breach of its obligations;

Loss of Connection Minutes
means the aggregated duration in minutes of Interruptions during a specified period;

Normal Conditions
means, in relation to a Customer Point of Service, the following conditions as they relate to operation of the **grid**:

(a) there are no **outages** having a material effect on the capability of the **grid** servicing the Customer Point of Service;

(b) where the operation of particular **generating units** may have a material effect on the Customer Point of Service, sufficient of those **generating units** are available to be dispatched;

(c) all Connected Parties whose operations may have a material effect on the Customer Point of Service are materially compliant with the requirements of the Connection Code and Part C of the Electricity Governance Rules; and

(d) voltages on the grid having a material effect on the Customer Point of Service are within the range of levels required by part C of the Electricity Governance Rules.

Planned Interruption
means an Interruption caused by a **planned outage**;

Proposed Point of Service Schedule
has the meaning specified in clause 39.4;

Target Voltage
means, in relation to a Customer Point of Service, the nominal voltage at the bus or such other voltage as may be agreed between Transpower and the Customer;

Unplanned Interruption
means an Interruption caused by an **unplanned outage**;

Unserved Energy
means the estimated aggregate amount by which the demand for **electricity** exceeds the supply of **electricity** at each Customer Point of Service as a result of **planned outages** or **unplanned outages** of Connection Assets; and

Voltage Range Objective
means:

(a) in relation to a Customer Point of Service at which all supply transformers have on-load tap changers installed, ± 2.5% of the Target Voltage for that Customer Point of Service;

(b) in relation to a Customer Point of Service at which any supply transformer has off-load tap changers installed, ± 5% of the Target Voltage for that Customer Point of Service; and

(c) in relation to any other Customer Point of Service, the voltage range specified in part C of the Electricity Governance Rules or applying under part C of the Electricity Governance Rules for the nominal voltage existing at that Customer Point of Service.

36. SERVICE STANDARDS

36.1 **Capacity Service Levels:**

(a) Except as permitted by clause 36.1(b), Transpower must:

(1) at all times make the Connection Assets available:

A. at the Capacity Service Levels;

B. in the configuration set out in Schedule 4 (Connection Assets); and

(2) not change the Connection Assets.

(b) Transpower is not required to comply with clause 36.1(a) if:

(1) permitted under the **Outage Protocol**;

(2) a Connection Asset has been replaced or enhanced as a result of an investment undertaken in accordance with clause 40.2 or rule 5.6 of section II of part F of the Electricity Governance Rules; or

(3) a Connection Asset is permanently removed from service or the Connection Assets are permanently reconfigured in accordance with clause 40.3.

(c) Notwithstanding clause 36.1(a)(1)(A) or any other provision of this Agreement, to the extent that an act, omission, event, or series of related events constitutes a breach of a Capacity Service Level and a breach of the **Outage Protocol**, Transpower's sole liability for that breach will be under the Electricity Governance Rules and Transpower will not be liable under this Agreement for that breach. To avoid doubt, clause 15.5 does not apply in such instance.

36.2 **Availability and Reliability Service Levels for Information**:

The service levels in Part A of Schedule 5 (Service Measures) which relate to availability and reliability at a Customer Point of Service are for the purpose of providing the Customer with information on those service levels only. Transpower will not be in breach of this Agreement for failing to meet those service levels.

36.3 **Reporting and Response Service Levels**

Transpower will comply with the reporting and response service levels in Part B of Schedule 5 (Service Measures).

37. REPORTING

37.1 Performance Reporting on Connection Asset Services:

Transpower will report to the Customer by 30 November each year on performance in respect of each **connection location** for the preceding period from 1 July to 30 June using the following indices of performance:

(a) **Capacity of Connection Assets**:

(1) in respect of each Capacity Service Level, the number of times the Capacity Service Level was not met, except where clause 36.1(b) applies; and

(2) in respect of each **branch** listed in Schedule 5 (Service Measures), the design maximum fault level in Amps per second.

(b) **Availability of Connection Assets**:

(1) **Unavailability due to Planned Outages**:

percentage of hours per year that the aggregate Connection Assets relating to a Customer Point of Service (including Connection Assets between the Customer Point of Service and any Point of Connection relating to the Customer Point of Service) are unavailable due to a **planned outage** of any of those Connection Assets of one minute or longer, compared to the service level for annual unavailability of the Connection Assets due to **planned outages** of any of those Connection Assets of one minute or longer set out in Part A of Schedule 5 (Service Measures);

(2) **Unavailability due to Unplanned Outages**:

percentage of hours per year that the aggregate Connection Assets relating to a Customer Point of Service (including Connection Assets between the Customer Point of Service and any Point of Connection relating to the Customer Point of Service) are unavailable due to an **unplanned outage** of any of those Connection Assets of one minute or longer, compared to the service level for annual unavailability of the Connection Assets due to **unplanned outages** of any of those Connection Assets of one minute or longer set out in of Part A of Schedule 5 (Service Measures);

(3) **Unavailability due to momentary Outages**

number of times per year that the aggregate Connection Assets at a Customer Point of Service (including Connection Assets between the Customer Point of Service and any Point of Connection relating to the

Customer Point of Service) are unavailable due to **outages** of any of those Connection Assets that are shorter than one minute.

(c) **Reliability**:

(1) **Number of Interruptions**:

A. number of Planned Interruptions at a Customer Point of Service of one minute or longer due to **planned outages** of either Connection Assets (including Connection Assets between the Customer Point of Service and any Point of Connection relating to the Customer Point of Service) or **interconnection assets** of one minute or longer, compared to the service level for annual number of Planned Interruptions at the Customer Point of Service due to **planned outages** of those assets set out in Part A of Schedule 5 (Service Measures);

B. number of Unplanned Interruptions at a Customer Point of Service of one minute or longer due to **unplanned outages** of either Connection Assets (including Connection Assets between the Customer Point of Service and any Point of Connection relating to the Customer Point of Service) or **interconnection assets** of one minute or longer, compared to the service level for annual number of Unplanned Interruptions at the Customer Point of Service due to **unplanned outages** of those assets set out in Part A of Schedule 5 (Service Measures); and

C. number of Interruptions at a Customer Point of Service shorter than one minute per year, due to **outages** that are shorter than one minute.

(2) **Duration of Interruptions**:

Loss of Connection Minutes due to:

A. Planned Interruptions at a Customer Point of Service of one minute or longer caused by **planned outages** of either Connection Assets (including Connection Assets between the Customer Point of Service and any Point of Connection relating to the Customer Point of Service) or **interconnection assets** of one minute or longer; and

B. Unplanned Interruptions at a Customer Point of Service of one minute or longer caused by **unplanned outages** of either Connection Assets (including Connection Assets between the Customer Point of Service and any Point of Connection relating to the Customer Point of Service) or **interconnection assets** of one minute or longer.

(3) **Unserved Energy**:

Amount of Unserved Energy due to:

A. Planned Interruptions at the Customer Point of Service of one minute or longer caused by **planned outages** of one minute or longer, compared to the service level for Unserved Energy caused by Planned Interruptions of one minute or longer caused by **planned outages** of one minute or longer of those assets set out in Part A of Schedule 5 (Service Measures); and

B. Unplanned Interruptions at the Customer Point of Service of one minute or longer caused by **unplanned outages** of one minute or longer, compared to the service level for Unserved Energy caused by Unplanned Interruptions of one minute or longer caused by **unplanned outages** of one minute or longer of those assets set out in Part A of Schedule 5 (Service Measures).

(d) **Customer Service Measures**

For each reporting and response service level set out in Part B of Schedule 5, the number of times the service level was not met.

As part of its report under this clause 37.1, Transpower will:

(e) **Identify Source of Failure**:

to the extent practicable, identify any circumstance which may have given rise to any failure to meet a service level; and

(f) **Advise Intended Remedial Steps**:

advise on any steps that it intends to take or other options to reduce the likelihood of failing to meet the service levels in the future.

37.2 **Real time signal of demand by Region from SCADA**

Transpower must provide to the Customer information on the **regional demand** (as defined in the **transmission pricing methodology**) for each region that the Customer has a **connection location**. This information is to be derived from **SCADA**, updated at least every five minutes, and updated not more than five minutes after the **regional demand** is measured.

37.3 **Information on capacities of individual Connection Assets**

(a) Transpower must publish:

(1) for each transformer that is a Connection Asset, the overall 24 hour post contingency capacity rating of the Connection Asset in Amps and MVA, for both the summer and winter periods; and

(2) for all other Connection Assets, the overall capacity rating of the Connection Asset in Amps and MVA and, if the Connection Assets are circuits, for both the summer and winter periods.

(b) The information required under paragraph (a) above:

(1) must be consistent with the **manufacturer's specification** of the Connection Asset or with the most recent Asset Capability Statement provided by Transpower under rule 2.5 of Technical Code A of schedule C3 of part C of the Electricity Governance Rules, if this differs from the **manufacturer's specification**;

(2) must be provided in a form that allows the **branch** to which each Connection Asset belongs to be easily identified; and

(3) must be published either in the Centralised Data Set maintained under rule 11.1 of section III of part F of the Electricity Governance Rules or in the form determined by the **Board** in accordance with rule 7.2 of section VI of part F of the Electricity Governance Rules for publication of the information required under rule 7.1 of section VI of part F of the Electricity Governance Rules.

37.4 **Performance Reporting on Interconnection Asset Services:**

To the extent that the following information relates to the delivery of **electricity** to a Customer Point of Service or any Interruptions and is required to be provided under the Electricity Governance Rules, Transpower will provide to the Customer, by 30 November each year:

(a) the information set out in the annual report on **interconnection branch** capacity and **grid** configuration that Transpower is required to publish under section VI of part F of the Electricity Governance Rules; and

(b) the information set out in the annual report on the asset availability and reliability of **interconnection assets** under section VI of part F of the Electricity Governance Rules that Transpower is required to publish under section VI of part F of the Electricity Governance Rules.

37.5 **De-energisation:**

Transpower's obligations under this Part are subject to any obligations or rights it may have under this Agreement to de-energise a Point of Connection or to require a Point of Connection to be de-energised. In addition, Transpower may de-energise a Point of Connection if directed to do so by the Board or the **Rulings Panel** under the Electricity Governance Regulations or the Electricity Governance Rules or by the **clearing manager** or any other person authorised to do so by the Electricity Governance Rules or the Electricity Governance Regulations and Transpower will use reasonable endeavours to notify the Customer in advance of such de-energisation if it has received sufficient notice of the direction.

37.6 **Reporting on estimated reliability of feeder branches**

(a) If requested to do so by the Customer, Transpower must provide the Customer with an estimate of the expected annual number of Unplanned Interruptions of one minute or longer at a Point of Connection due to **unplanned outages** of Connection Assets of one minute or longer, such estimate being as accurate as is reasonably practicable.

(b) The estimate under paragraph (a) must be provided within 40 Business Days of a request from the Customer unless:

(1) it is not reasonably practicable for Transpower to do so, in which case Transpower must provide the information as soon as possible and must advise the Customer of the date by which the estimate will be provided; or

(2) agreed otherwise between Transpower and the Customer.

38. COMPLIANCE WITH LAWS, RULES AND STANDARDS

The Customer will design, construct, maintain and operate the Customer's Assets, and Transpower will design, construct, maintain and operate the **grid**, in accordance with:

(a) **Law**

all relevant Laws;

(b) **Rules**

the requirements of the Electricity Governance Rules (including obligations on the Customer to provide information to facilitate system planning, as set out in rule 3 of section III of part F of the Electricity Governance Rules); and

(c) **Good Electricity Industry Practice and standards**

Good Electricity Industry Practice and applicable New Zealand technical and safety standards.

39. POINTS OF SERVICE SCHEDULE

39.1 **Points of Service Schedule:**

Schedule 2 (Points of Service) is to:

(a) **Identify Points of Service:**

identify the Customer Points of Service;

(b) **Forecast Loading**:

contain a forecast loading table incorporating all of the information required under clause 39.2 for each Customer Point of Service; and

(c) **Voltage**:

contain a voltage table incorporating all of the information required under clause 39.3 for each Customer Point of Service at which **electricity** is conveyed from the **grid** to the Customer's Assets.

The information contained in the forecast loading table and the voltage table is for the Customer's information purposes only and may be amended by Transpower at any time to reflect changes to the **assets** installed at the Customer Points of Service. Transpower will notify the Customer of any amendments to the tables promptly after it amends the table. In any event, Schedule 2 (Points of Service) is to be reviewed and updated annually in accordance with clause 39.4.

39.2 **Forecast Loading Table:**

The forecast loading table in Schedule 2 (Points of Service) is to specify Transpower's reasonable view on the following information:

(a) **Forecast Peak Loading:**

the rate of energy transfer in megawatts and the associated power factor used to calculate the Forecast Peak Loading for that Customer Point of Service for a specified period;

(b) **Regional Grid Constraints:**

whether there are any regional grid constraints that could lead to the maximum rate of energy transfer, measured in megawatts, at which the Connection Assets are capable of simultaneously conveying **electricity** to or from all the Customer Points of Connection at one Customer Point of Service, from time to time being less than the number of megawatts recorded in the forecast loading table for that Customer Point of Service;

(c) **Firm Supply Transformers:**

whether the combined rating of the connection or supply transformers normally remaining in use at the Customer Point of Service during an **outage** of the largest transformer at that Customer Point of Service exceeds the Forecast Peak Loading for that Customer Point of Service; and

(d) **Spare Transformer To Be Kept On-site:**

where the information in response to (c) is negative, indicate whether or not the Customer and Transpower have agreed that Transpower is to keep on site at the relevant **connection location** a spare transformer which can be put into service within a reasonable period of time following an **outage** of one of the transformers normally in use so that the rating of the revised transformer configuration at the Customer Point of Service following the replacement would exceed the Forecast Peak Loading.

39.3 **Voltage Table:**

The voltage table is to contain sufficient information to enable identification of the Voltage Range Objective for each Customer Point of Service at which **electricity** is conveyed from the **grid** to the Customer's Assets and may include the following:

(a) **Nominal Voltage**:

the nominal voltage at the bus;

(b) **Target Voltage**:

the Target Voltage;

(c) **On Load Tap Changers**:

a statement as to whether or not on-load tap changers are installed on all supply transformers at that Customer Point of Service; and

(d) **Tap Changer Range and Step**:

the tap range and tap step of any tap changers installed on any supply transformers at that Customer Point of Service.

The voltage table must also identify whether or not Transpower considers the Voltage Range Objective is achievable under Normal Conditions with existing equipment, and if not, provide a summary of the reasons for Transpower's opinion.

39.4 **Initial and Annual Update of Points of Service Schedule:**

To facilitate discussion of likely future usage at the Customer Points of Service, Transpower will:

(a) within 20 Business Days of the Commencement Date, provide the Customer with a proposed Point of Service Schedule for the period up to 31 March in the following year. The proposed Point of Service Schedule will become Schedule 2 (Point of Service) unless within 50 Business Days after the Commencement Date any revised proposed Point of Service Schedule has been notified to the Customer in which case the revised proposed Point of Service Schedule will become Schedule 2 (Points of Service) as from that date;

(b) prior to 31 December in each year, review and update the information in Schedule 2 (Points of Service) and provide the Customer with a proposed Points of Service Schedule for the 12 month period commencing on 1 April in the following year (a "proposed Points of Service Schedule"). The proposed Points of Service Schedule will become Schedule 2 (Points of Service) as from 1 April in the following year unless prior to then any revised proposed Points of Service Schedule has been notified to the Customer in which case the revised proposed Points of Service Schedule will become Schedule 2 (Points of Service) as from 1 April in the following year.

39.5 **Customer to Advise Future Loading:**

The Customer is to keep Transpower informed of what it reasonably expects will be the maximum loading likely to arise at each Customer Point of Service as a result of the Customer's operations on a one to five year basis. The Customer is to provide such information to Transpower within 10 Business Days of receipt of a proposed Point of Service Schedule and otherwise as Transpower may reasonably request.

39.6 **Meeting to Discuss Future Usage:**

Either party may call a meeting with the other party to discuss any of:

(a) **Proposed Points of Service Schedule:**

a proposed Points of Service Schedule;

(b) **Customer's Expectations:**

the Customer's expectations of future maximum loading at each Customer Point of Service as a result of the Customer's operations over the next five years; and

(c) **Future Service Capability:**

the options for making Connection Assets available in future years at each Customer Point of Service to meet the Customer's reasonable expectations of future maximum loading at each Customer Point of Service as a result of the Customer's operations.

40. CHANGING AND REMOVING CONNECTION ASSETS

40.1 **Inconsistency with Grid Reliability Standards:**

Where:

(a) a **grid reliability report published** by Transpower in accordance with rule 12A of section III of part F of the Electricity Governance Rules sets out that the power system is not reasonably expected to meet the **N-1 criterion** at all times over the next five years; and

(b) a Connection Asset is the cause of this,

then, unless Transpower and the Customer have already complied with rules 5.1 to 5.3 of section II of part F of the Electricity Governance Rules in respect of that departure from the **grid reliability standards**, Transpower must promptly notify the Customer, and:

(c) in the case of a Connection Asset at a **connection location** to which the Customer is the only **designated transmission customer** connected, or is the only **designated transmission customer** with a **transmission agreement** with

Transpower requiring Transpower to make the Connection Asset available, follow the process set out in clause 40.2; and

(d) in the case of a Connection Asset to which more than one **designated transmission customer** is connected, and the **transmission agreement** or **transmission agreements** between Transpower and the other **designated transmission customer(s)** require Transpower to make the Connection Assets available, follow the process set out in rule 5.6 of section II of part F of the Electricity Governance Rules.

40.2 **Replacement and enhancement of Connection Assets**

(a) Where Transpower has identified a Connection Asset to which clause 40.1(c) applies:

(1) the Customer may propose the use of a different value of Unserved Energy, for the purposes of applying the **grid reliability standards** under this clause from the value specified in clauses 8.3.4 and 8.4.3 of schedule F4 of section III of part F of the Electricity Governance Rules, to Transpower within 15 Business Days of receiving notice under clause 40.1;

(2) if Transpower considers that the value of Unserved Energy proposed under subparagraph (1) is not reasonable, either it or the Customer may ask the **Board** to provisionally approve that value under rule 5.5 of section II of part F of the Electricity Governance Rules. If the **Board** does not provisionally approve the different value of Unserved Energy, the value of Unserved Energy under clauses 8.3.4 and 8.4.3 of schedule F4 of section III of part F of the Electricity Governance Rules applies; and

(3) if Transpower considers that the proposed value of Unserved Energy is reasonable, or the **Board** provisionally approves the different value under rule 5.5 of section II of part F of the Electricity Governance Rules, that different value must be used in applying the **grid reliability standards** under paragraphs (b) to (d) below;

(b) Transpower must as soon as practicable after identifying a Connection Asset to which clause 40.1(c) applies, investigate whether the Connection Asset meets the **grid reliability standards** (modified to take into account any different value of Unserved Energy that applies under paragraph (a)).

(c) If Transpower finds that the Connection Asset does not meet the **grid reliability standards** (modified to take into account any different value of Unserved Energy that applies under paragraph (a)), it must develop proposals for investment in the **grid** to ensure that the Connection Asset meets the **grid reliability standards** (modified to take into account any different value of Unserved Energy that applies under paragraph (a)), and propose them to the Customer as soon as reasonably possible after the publication of the **grid reliability report**.

(d) Transpower and the Customer must then attempt in good faith to reach an agreement, within six months of the date on which Transpower makes its proposals to the Customer under paragraph (c) or such longer period as agreed between the parties, for an investment or other solution (whether undertaken by Transpower or, subject to necessary land access being negotiated with Transpower, by the Customer or a third party in accordance with Good Electricity Industry Practice) that will have the effect of:

(1) maintaining the level of reliability for the relevant **connection location** at the level of reliability in the **grid reliability standards** (modified to take into account any different value of Unserved Energy that applies under paragraph (a)); or

(2) increasing or decreasing the level of reliability for the relevant **connection location** above or below the **grid reliability standards** (modified to take into account any different value of Unserved Energy that applies under paragraph (a)), subject to Transpower and the Customer complying with rules 5.1 to 5.3 of section II of part F of the Electricity Governance Rules.

(e) If a different value of Unserved Energy from the value specified in clauses 8.3.4 and 8.4.3 of schedule F4 of section III of part F of the Electricity Governance Rules has been used under paragraphs (b) to (d) above, before giving effect to any agreement reached under paragraph (d) and regardless of whether or not the **Board** has provisionally approved the different value of Unserved Energy, either Transpower or the Customer must comply with rule 5.5 of section II of part F of the Electricity Governance Rules.

(f) If Transpower and the Customer have not been able to reach an agreement under paragraph (d) above within six months of the publication of the **grid reliability report**, or such longer period as agreed:

(1) unless sub-paragraph (2) applies, the Customer or a third party shall be entitled to carry out an investment in respect of the Connection Assets, subject to necessary land access being negotiated with Transpower, Good Electricity Industry Practice and, if applicable, compliance with rules 5.1 to 5.3 of section II of part F of the Electricity Governance Rules; or

(2) Transpower may ask the **Board** to request that Transpower submit a **grid upgrade plan** in respect of the Connection Assets and, if the **grid upgrade plan** is approved, carry out the investment set out in the **grid upgrade plan**. For the avoidance of doubt, if the **grid upgrade plan** is not approved, the Customer or a third party may carry out an investment under sub-paragraph (1) above.

40.3 **Reconfiguration and Permanent Removal of Connection Assets**

(a) Transpower may only permanently remove a Connection Asset from service or permanently change the configuration of the Connection Assets from that set out in Schedule 4 (Connection Assets):

(1) in the case of a Connection Asset or Connection Assets to which the Customer is the only **designated transmission customer** connected, or is the only **designated transmission customer** with a **transmission agreement** with Transpower requiring Transpower to make the Connection Asset or Connection Assets available, if the Customer agrees to such removal or reconfiguration, subject to Transpower and the Customer complying with rules 5.1 to 5.3 of section II of part F of the Electricity Governance Rules; or

(2) in the case of a Connection Asset or Connection Assets to which more than one **designated transmission customer** is connected, and the **transmission agreement** or **transmission agreements** between Transpower and the other **designated transmission customer(s)** require Transpower to make the Connection Asset or Connection Assets available, in accordance with rule 5.7 or 5.8 of section II of part F of the Electricity Governance Rules.

(b) The Customer may not unreasonably decline to agree to the removal of a Connection Asset or the reconfiguration of the Connection Assets under clause 40.3(a)(2), taking into account the net benefits to other **designated transmission customers** and to end-users of **electricity** that might arise from the removal or reconfiguration.

40.4 **Changes to Connection Assets:**

If a Connection Asset is reconfigured, replaced, enhanced, or withdrawn from service on a permanent basis in accordance with clauses 40.2 or 40.3, or rule 5.6 of Section II of Part F of the Electricity Governance Rules, then:

(a) to the extent necessary as a result of such reconfiguration, replacement, enhancement or withdrawal, Transpower will send the Customer a revised Schedule 2 (Points of Service) that, on receipt, replaces Schedule 2 (Points of Service); and

(b) the process in rule 3.1.5 of section II of part F of the Electricity Governance Rules applies.

41. GRID CHARGES

41.1 **Customer's obligation to pay:**

The Customer must pay Grid Charges for each month calculated in accordance with the **transmission pricing methodology** and this Agreement.

41.2 **Setting Grid Charges:**

Within 20 Business Days of the Commencement Date, Transpower will:

(a) **Grid Charges**:

calculate the rates of Grid Charges in accordance with the **transmission pricing methodology** payable by the Customer per month for each **connection location**; and

(b) **Grid Charges Schedule**:

enter such rates in a copy of Schedule 3 (Grid Charges) and forward it to the Customer.

(c) **Charges Effective From Commencement Date**:

For the avoidance of doubt, the Grid Charges are effective from the Commencement Date.

41.3 **Changes to Transmission Pricing Methodology:**

If there is any change to the **transmission pricing methodology** which affects the rates of Grid Charges and it is not possible for Transpower to give notice of that change to the rates of the Grid Charges under clause 41.5 before the change comes into effect, Transpower will as soon as practicable and in any event before the change comes into effect:

(a) **Recalculate Grid Charges**:

recalculate the rates of Grid Charges in accordance with the revised **transmission pricing methodology** payable by the Customer per month for each **connection location**; and

(b) **Amend Grid Charges Schedule**:

forward to the Customer a revised Schedule 3 (Grid Charges).

41.4 **Suspension of Grid Charges:**

(a) If, for any reason, there is a continuous Interruption affecting all Customer Points of Service within the same **connection location** and lasting 24 hours or longer, the Grid Charges for any month during which the Interruption occurs will be calculated in accordance with the following formula:

$$a\left(1-\frac{b}{c}\right)$$

where

a = the Grid Charges which would have been payable in respect of that **connection location** for that month if this clause did not apply;

b = the number of complete hours in the month during which the loss of supply continued; and

c = the total number of hours in the month.

(b) To avoid doubt, this clause 41.4 applies regardless of the cause of the Interruption, including if it was caused by Force Majeure.

41.5 **Variation to Grid Charges:**

(a) Without limiting clause 41.3, Transpower may vary the Grid Charges payable per month as permitted under the **transmission pricing methodology** (provided such varied Grid Charges comply with the **transmission pricing methodology**). Transpower will give the Customer not less than three months' notice of any variation that is to be effective at the start of each **pricing year** as permitted under the **transmission pricing methodology**. For all other variations to the Grid Charges permitted under the **transmission pricing methodology**, Transpower will give the Customer not less than 20 Business Days' notice of the variation. If Transpower varies the Grid Charges, Transpower is to forward to the Customer a revised Schedule 3 (Grid Charges). Transpower's rights under this clause are in addition to any recalculation of Grid Charges under clause 19.2(b).

(b) In addition to clause 41.5(a), if Transpower proposes to vary the Grid Charges, effective from the start of a **pricing year**, it will consult with the Customer, to the extent possible, before giving notice under clause 41.5(a). For the avoidance of doubt, Transpower is not prevented from giving notice under clause 41.5(a) by reason of failing to consult the Customer under this clause 41.5(b).

41.6 **Application of Prudent Discount Policy under the Transmission Pricing Methodology**

Transpower and the Customer must perform their respective obligations and may exercise their respective rights under the prudent discount policy set out in the **transmission pricing methodology**.

41.7 **Alteration of Charges Resulting from Replacement, Enhancement, or Removal of Connection Assets:**

If Transpower replaces or enhances any Connection Assets under clause 40.2 or rule 5.6 of section II of part F of the Electricity Governance Rules, or permanently removes or reconfigures any Connection Assets under clause 40.3, then:

(a) **Transpower will recalculate**:

Transpower will recalculate the Grid Charges in accordance with the **transmission pricing methodology** to take account of such replacement, enhancement, removal or reconfiguration;

(b) **Schedule of Changes**:

If the recalculation results in an increase or decrease to the Grid Charges, Transpower will forward to the Customer a revised Grid Charges Schedule not less than 20 Business Days prior to the replacement, enhancement, removal or reconfiguration;

(c) **Charges will Change**:

Transpower will notify the Customer of completion of the replacement, enhancement, reconfiguration, or permanent removal from service within 5 Business Days of such completion. In the absence of any agreement to the contrary the revised Schedule 3 (Grid Charges) will take effect on the first day following such completion. Transpower's rights under this clause 41.7 are in addition to its rights to vary the Grid Charges under clauses 41.3, 41.5 and 41.6.

42. TECHNICAL COMPLIANCE OBLIGATIONS

42.1 Technical Compliance Obligations:

The obligations of Transpower and the Customer under clause 38 are Technical Compliance Obligations.

PART D: LOSSES AND CONSTRAINT EXCESS PAYMENTS

43. SCOPE OF PAYMENTS

From time to time, Transpower receives losses and constraint excess payments from the **clearing manager** under the Electricity Governance Rules. This Part sets out how Transpower will allocate to the Customer a portion of the losses and constraint excess payments received as a deduction from the Grid Charges payable by the Customer.

Transpower may determine to account for or apply losses and constraint excess payments in a different manner, in which case Transpower may terminate this Part in accordance with clause 46.2.

44. DEFINITIONS

Customer Share
has the meaning specified in clause 45.1(a);

Customer Wash-Up Amount
has the meaning specified in clause 45.2; and

Wash-Up Amount
has the meaning specified in clause 45.2.

45. CUSTOMER SHARE

45.1 **Calculation of Customer Share:**

In respect of each month in which it receives a losses and constraint excess payment, Transpower will:

(a) **Calculation**:

calculate, in accordance with its prevailing methodology for distribution of losses and constraint excess payments, the share of that payment (net of any GST received) to be allocated to the Customer (the "Customer Share"); and

(b) **Deduction of Customer Share**:

issue the Customer a credit note for the Customer Share. The credit note will be issued at the same time as the invoice for Grid Charges for the month following the month in which the losses and constraint excess payment is received.

45.2 **Wash Up:**

If Transpower is required to repay to the **clearing manager** under the Electricity Governance Rules any part of any losses and constraint excess payment previously received by it (the "Wash-Up Amount") it will calculate the proportion of the Wash-Up

Amount which was credited to the Customer (in dollars) (the "Customer Wash-Up Amount"), and it may either:

(a) retain future amounts which would otherwise be credited to the Customer as the Customer Share, up to the Customer Wash-Up Amount; or

(b) invoice the Customer for the Wash-Up Amount in which case the Customer must pay that amount in accordance with this Agreement.

46. TERMINATION OF THIS PART

46.1 Termination of Part C: Grid Connection:

Any termination of Part C: Grid Connection is deemed to terminate this Part.

46.2 Termination:

If Transpower at any time determines to account for or apply losses and constraint excess payments in a manner different to that contemplated by this Part, Transpower may terminate this Part by giving the Customer not less than three months' notice.

SCHEDULE 1

POINTS OF CONNECTION

Points of Connection Schedule		
Connection location	**Points of Service**	**Points of Connection**

SCHEDULE 2
POINTS OF SERVICE

(As described in clause 39)

Forecast Loading Table

Point of Service	Forecast Peak Loading		Injection/ Offtake	Subject to regional grid constraints? (Yes/No)	Supply Transformer		Comments
	MW	Pf			Firm with no break? (Yes/No)	Firm after change of on-site spare? (Yes/No)	

Voltage Table

Point of Service	Nominal Bus Voltage	Target Voltage	Tap Changer Type	Tap Range %	Tap Step %	Can voltage range objectives be met? (Yes/No)	Comments

SCHEDULE 3
GRID CHARGES

SCHEDULE 4
CONNECTION ASSETS

Example diagram of the configuration of connection assets at a **connection location**:

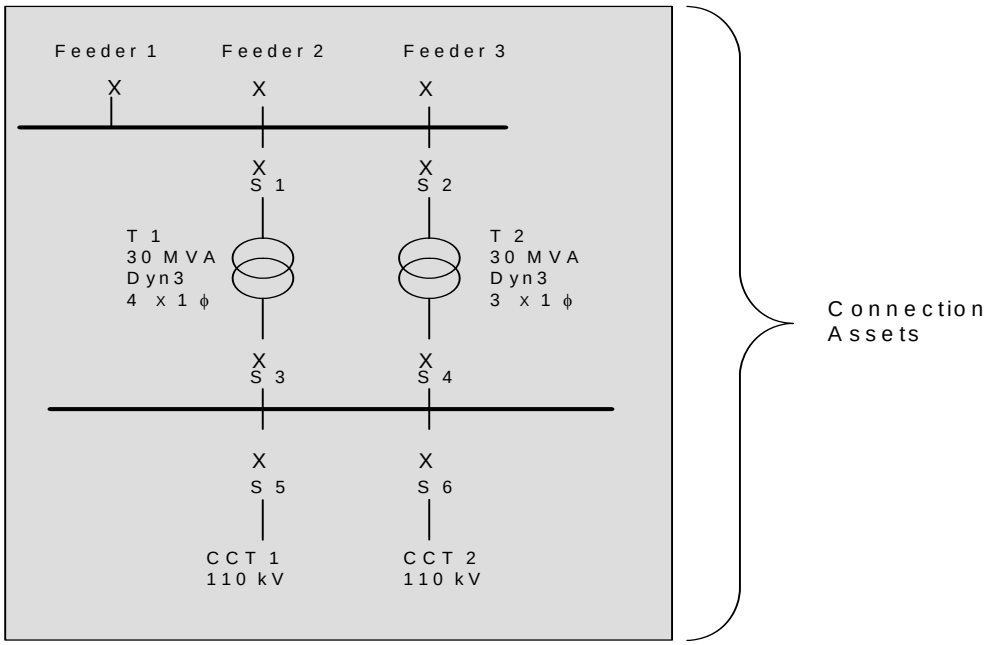

SCHEDULE 5
SERVICE MEASURES

Part A: Connection location-specific service measures

1. Connection location: [*name*]

1.1 **Service: Capacity of Connection Branches**

1.1.1 **Circuit Branch: [*Identify Circuit Branch*]**

Service measure	**Service level**
Overall continuous capacity rating of the **circuit branch**	[ ] Amps and [ ] MVA [*for summer period*] and [ ] Amps and [ ] MVA [*for winter period*]
Level of impedance of the **circuit branch resistive** and **reactive** – **shunt** [*Provide for each **circuit branch** with impedance of 0.0001 PU or more using 100MVA as the base*]	[ ] PU (using 100MVA as the base)
Level of impedance of the **circuit branch resistive** and **reactive** – **series** [*Provide for each **circuit branch** with impedance of 0.0001 PU or more using 100MVA as the base*]	[ ] PU (using 100MVA as the base)
Nominal high voltage rating of the Circuit	[ ] kV
High voltage range that the **circuit branch** can operate over	Maximum: [ ] kV Minimum: [ ] kV

[*Repeat table for each **circuit branch** at the **connection location**]*

1.1.2 **Transformer Branch: [*Identify Transformer Branch*]**

Service measure	**Service level**
Overall 24 hour post contingency capacity rating of the **transformer branch**	2 Winding [ ] Amps and [ ] MVA [*for summer period*] and [ ] Amps and [ ] MVA [*for winter period*] 3 Winding

	HV [ ] Amps and [ ] MVA [*for summer period*] and [ ] Amps and [ ] MVA [*for winter period*] **MV** [ ] Amps and [ ] MVA [*for summer period*] and [ ] Amps and [ ] MVA [*for winter period*] **LV** [ ] Amps and [ ] MVA [*for summer period*] and [ ] Amps and [ ] MVA [*for winter period*]
Continuous capacity rating	2 Winding [ ] Amps and [ ] MVA 3 Winding **HV** [ ] Amps and [ ] MVA **MV** [ ] Amps and [ ] MVA **LV** [ ] Amps and [ ] MVA
Level of impedance of the **transformer branch resistive** and **reactive** – **shunt** [*Provide for each **transformer branch***]	2 Winding [ ] PU (using 100MVA as the base) 3 Winding **HV**[ ] PU, **MV** [ ]PU, **LV** [ ] PU (using 100MVA as the base)
Level of impedance of the **transformer branch resistive** and **reactive** – **series** [*Provide for each **transformer branch***]	2 Winding [ ] PU (using 100MVA as the base) 3 Winding **HV**[ ] PU, **MV** [ ]PU, **LV** [ ] PU (using 100MVA as the base)
Nominal high voltage rating of the **transformer branch**	[ ] kV
High voltage range that the **transformer branch** can operate over	Maximum: [ ] kV Minimum: [ ] kV

Tapping steps and ranges	Tap voltage range: Maximum: [ ] kV Minimum: [ ] kV Number of tapping steps: [ ] Size of each tapping step as a percentage of nominal operating voltage range: [ ]% On-load/Off-load: [*On-load/Off-load*] On-load tapping capability [*Automatic/Manual*] [If on-load tapping capability is automatic, is it auto selected? [*Yes/No*]] [or] [If on-load tapping capability is manual, what tap step is normally set? [*Actual or expected position at winter peak demand*]] [*Repeat for each tap changer on the Transformer branch*]

[*Repeat table for each* ***transformer branch*** *at* ***the connection location]***

1.2 **Service: Availability in respect of Customer Point of Service: *[name]***

Service measure	**Service level**
Annual unavailability of aggregate Connection Assets relating to the Customer Point of Service due to **planned outages** of any of those Connection Assets of one minute or longer	Unavailable for no more than [ ]% of 1 July to 30 June year (pro rata for a part year), calculated by hours unavailable ÷ hours per year
Annual unavailability of aggregate Connection Assets relating to the Customer Point of Service due to **unplanned outages** of any of those Connection Assets of one minute or longer	Unavailable for no more than [ ]% of per 1 July to 30 June year (pro rata for a part year), calculated by hours unavailable ÷ per year

[Repeat table for each Customer Point of Service at the ***connection location****]*

1.3 **Service: Reliability in respect of Customer Point of Service: *[name]***

Service measure	**Service level**

Service measure	**Service level**
Annual number of Planned Interruptions at the Customer Point of Service of one minute or longer due to **planned outages** of either Connection Assets (including Connection Assets between the Customer Point of Service and any Point of Connection relating to the Customer Point of Service) or **interconnection assets** of one minute or longer	[*number*] per 1 July to 30 June year (pro rata for a part year)
Annual number of Unplanned Interruptions at the Customer Point of Service of one minute or longer due to **unplanned outages** of either Connection Assets (including Connection Assets between the Customer Point of Service and any Point of Connection relating to the Customer Point of Service) or **interconnection assets** of one minute or longer	[*number*] per 1 July to 30 June year (pro rata for a part year)
Unserved Energy resulting from Planned Interruptions at the Customer Point of Service of one minute or longer caused by **planned outages** of one minute or longer of either Connection Assets (including Connection Assets between the Customer Point of Service and any Point of Connection relating to the Customer Point of Service) or **interconnection assets**	[ ] **MWh**
Unserved Energy resulting from Unplanned Interruptions at the Customer Point of Service of one minute or longer caused by **unplanned outages** of one minute or longer either of Connection Assets (including Connection Assets between the Customer Point of	[ ] **MWh**

Service measure	**Service level**
Service and any Point of Connection relating to the Customer Point of Service) or **interconnection assets**	

*[Repeat table for each Customer Point of Service at the **connection location**]*

2. Connection Location: [*name*]

*[Repeat above measures for each **connection locatio**n]*

Part B: Reporting and response service measures

Service measure	**Service level**
Length of time taken by Transpower to report a breach of service levels	21 days, or such other time period as agreed between the parties.
Length of time taken by Transpower to investigate and respond to Complaints about service provided under this Agreement	21 days, or such other time period as agreed between the parties.
Length of time taken by Transpower to provide a report following an unplanned interruption to, or degradation of, its transmission service	42 days, or such other time period as agreed between the parties.

SCHEDULE 6
ACCESS AND OCCUPATION SCHEDULE

1. SCOPE OF ACCESS AND OCCUPATION SCHEDULE

1.1 Acknowledgement:

Transpower and the Customer acknowledge:

(a) **Land**:

Transpower is the owner of the Land;

(b) **Facilities**:

the Customer is the owner or lessee of the Facilities;

(c) **Licence**:

Transpower has agreed to grant to the Customer a licence to occupy certain parts of the Land in order to maintain and operate the Facilities for the conveyance of **electricity**; and

(d) **Compliance**:

the licence specified in this Schedule is granted subject to the Customer complying with the Customer's obligations under this Schedule.

2. GLOSSARY AND INTERPRETATION

2.1 Definitions:

In this Schedule, unless the context otherwise requires:

Authority
means any local or territorial authority, or any other body having jurisdiction over the Land and the Facilities or their use;

Equipment
includes equipment, tools, cables, machinery, lines, wires and all materials and items required for the purposes of exercising any of the rights given in this Schedule;

Facilities
means, in relation to each piece of Land, the Equipment and any structures related to that Equipment owned or leased by the Customer and located in any Facilities Area and described in appendix 1, including any further Equipment or structures constructed by the Customer in accordance with clause 7, and any **metering installation** required under clause 32 of Part B of this Agreement;

Facilities Area
means, in relation to each piece of Land, the area occupied by the Facilities and more particularly as marked in the relevant plan attached to and forming part of appendix 1;

Land
means each piece of land described in appendix 1;

Maintain
includes maintain, repair, replace, renew, alter, inspect, remove, lay and **Maintenance** is to be interpreted accordingly;

Operate
means the conveyance of **electricity** by means of the Facilities, and includes the conveyance of any other signal or matter which is permitted or authorised in accordance with this Schedule and **Operation** is to be interpreted accordingly; and

Operating Standards
means the operating standards set out in the Connection Code.

2.2 **Appendices:**

References to appendices are references to appendices of this Schedule.

2.3 **Separate Licence:**

This Schedule is to be read as a separate licence for the Facilities located on each piece of Land.

3. LICENCE

3.1 **Rights of Licensee:**

(a) Transpower grants the Customer:

(1) a licence for the Facilities to occupy the Facilities Area;

(2) the right to Operate and Maintain the Facilities for the purpose of the conveyance of **electricity**; and

(3) the right of ingress and egress over the Land for the purposes of (2) above,

upon the terms and conditions of this Schedule.

(b) Transpower will ensure that the Customer has unimpeded access to the Facilities at all reasonable times.

3.2 **Licence Charges:**

The Customer must pay all of the Licence Charges for each month specified in appendix 1 in accordance with this Agreement.

4. USE OF FACILITIES AREA

4.1 Purpose of Occupation:

The Customer will use the Facilities Area for the purpose of Maintaining and Operating the Facilities as set out in this Schedule and not for any other purpose.

4.2 No Warranty as to Suitability:

Transpower does not in any way warrant or represent that the Facilities Area or the Land will be suitable or adequate for the purpose of the Customer and, to the full extent permitted by law, all warranties and representations as to suitability and adequacy imposed by law are expressly negatived.

4.3 Not fixtures:

The Facilities will not become, or be deemed to be, fixtures or part of the Land. The Facilities will remain at all times in the legal and beneficial ownership of the Customer (or the lessor of those Facilities to the Customer as the case may be).

4.4 Disclosure of ownership:

Transpower, when dealing with third parties, will disclose to such third parties the nature of the Customer's ownership interest in the Facilities where not to do so would or might give rise to the impression that a person other than the Customer was the owner of the Facilities.

5. COMPLIANCE WITH SAFETY AND SECURITY PROCEDURES

5.1 Compliance with Operating Standards:

The Customer, when exercising any of the rights contained in this Schedule, must at all times comply with the Operating Standards relating to safety, security, access and operating practice.

5.2 Suspension of Rights:

Notwithstanding anything to the contrary in this Agreement, Transpower reserves the right to suspend the exercise of the Customer's rights under this Schedule if the Customer's activities on the Land, including Maintenance and Operation, are not carried out in accordance with the Operating Standards. Transpower agrees that in exercising its powers under this clause 5.2, it will only do so on reasonable grounds relating to the safety, integrity and continuity of the operation of Transpower's substation or any other part of the **grid** and any suspension will be for the minimum period reasonably necessary to ensure the Customer's compliance with the Operating Standards.

5.3 Security:

Transpower will use reasonable endeavours to maintain the security of any perimeter fences erected on the Land but otherwise Transpower will not be responsible for the

security of the Facilities, property and other structures or improvements erected by the Customer in the Facilities Area.

5.4 **Emergencies:**

The Customer may, from time to time, if it considers (acting reasonably) that there is an emergency situation involving public safety and security, temporarily exclude entry to the Facilities Area.

6. OPERATION AND MAINTENANCE OF FACILITIES

6.1 **Right to Maintain and Operate Facilities:**

Transpower will allow the Customer and its Associates to enter onto the Land with or without Equipment or vehicles for any purposes associated with the Maintenance and Operation of the Facilities.

6.2 **Operation:**

The Customer must Operate the Facilities in accordance with Good Electricity Industry Practice.

6.3 **Maintenance:**

The Customer must:

(a) **Maintain:**

Maintain the Facilities in good order and repair in accordance with Good Electricity Industry Practice;

(b) **Repair:**

within a reasonable time, comply with any notice given by Transpower to repair the Facilities and carry out all other repairs, in each case, to the satisfaction of Transpower (acting reasonably); and

(c) **Repair of Damage:**

if, during the Maintenance or the Operation of the Facilities, any damage is caused to the Facilities Area by the Customer and its Associates, the Customer will reinstate the area and make good any damage.

7. IMPROVEMENTS AND NEW FACILITIES

7.1 **New Structures and Equipment**:

(a) Subject to the Customer’s right to Maintain the Facilities, the Customer must not construct any new structures or Equipment (including upgrading or improving existing Equipment) in the Facilities Area without Transpower's prior written approval (not to be unreasonably withheld or delayed).

(b) The Customer must not construct any new structures or Equipment on the Land outside the Facilities Area without Transpower's prior written approval in its sole discretion.

7.2 **Plans and Specifications**:

In seeking Transpower's approval for the construction of any new structures and any new Equipment in the Facilities Area or on the Land, the Customer will submit plans and specifications of the proposed works to Transpower for approval and Transpower will respond with its approval within 20 Business Days or such other time as is reasonable in the circumstances. Transpower may require as conditions of its approval that:

(a) **Executed by Contractors**:

any such works must be executed by contractors or tradesmen approved by Transpower (acting reasonably); and

(b) **Consents etc**:

the Customer obtains from every Authority all necessary consents, approvals and permits and upon request produces copies of all such consents, approvals and permits to Transpower; and

(c) **Reimbursement**:

the Customer reimburses Transpower for any reasonable costs or expenses that may be incurred by Transpower in giving its approval for the construction of any new Equipment pursuant to this clause 7.2; and

(d) **Completion**:

upon completion of the works, the Customer produces any certificates of compliance issued by any Authority.

7.3 **Updating Description of Facilities**:

If the Customer constructs any new structures or any new Equipment pursuant to this clause 7:

(a) **Customer to provide plans**:

the Customer will, within 30 Business Days from the date of completion of such works, provide Transpower with an as-built plan of the completed works (in a form which is reasonably acceptable to Transpower (acting reasonably)); and

(b) **Transpower to update Schedule**:

Transpower will, within 10 Business Days from the date of receipt of such plan, update the descriptions of the Facilities and Facilities Area contained in appendix

1 and forward an amended appendix 1 to the Customer. The amended appendix 1 will form part of this Schedule from that date.

7.4 **Building Act Compliance:**

The Customer, when undertaking any building work (as that term is defined in the Building Act 2004), must comply with all statutory requirements including the obtaining of building consents and code compliance certificates under that Act (if required).

7.5 **Repair of Damage:**

Any damage to the Facilities Area caused during the construction of any new structures or any new Equipment will be made good by the Customer as soon as reasonably practicable.

8. NATURE OF OCCUPATION

8.1 **No Legal or Equitable Interest**:

The Customer acknowledges that this Schedule does not confer upon the Customer any legal or equitable interest in the Land.

8.2 **No Caveat Registered**:

The Customer must not lodge a caveat or any other such document against the title to the Land.

9. RISK AND INDEMNITY

9.1 **The Customer to Occupy Land at its Risk**:

The Customer acknowledges and agrees:

(a) **Transpower's Operations**:

that Transpower operates an electrical substation on the Land, with electrical plant and equipment located on it and that certain dangers exist; and

(b) **Release**:

to occupy and use the Land and Facilities Area at the Customer's risk and releases, to the fullest extent permitted by law, Transpower and its Associates from all claims and demands of any kind and from all liability which may arise in connection with the operation of the electrical substation relating to any accident, damage or injury occurring to any person or property on or about the Land or the Facilities Area that is caused directly or indirectly by the Customer or its Associates, except if the claims, demands or liability arise as a result of Transpower's negligence or failure to comply with the terms of this Schedule.

9.2 **Indemnity**:

The Customer indemnifies Transpower, to the fullest extent permitted by law, against all obligations (including strict liability), actions, proceedings, costs, claims, penalties, damages, charges, demands or loss suffered or incurred by Transpower:

(a) **Omissions**:

as a result of any act or omission by the Customer or its Associates; and

(b) **Breach of Statute**:

in relation to any action or proceeding taken against Transpower as a result of a breach of:

(1) the Health and Safety in Employment Act 1992;

(2) the Electricity Act 1992;

(3) the Building Act 1991;

(4) the Resource Management Act 1991; or

(5) any other Law,

directly or indirectly affecting, or relating to, the use of the Land, the Facilities Area or the Facilities by the Customer or its Associates (other than as a result of any negligence by Transpower or default by Transpower under this Agreement), or any activity carried on by the Customer or its Associates on or in relation to the Land, the Facilities Area or the Facilities.

Transpower must use all reasonable endeavours to mitigate any obligations, actions, proceedings, costs, claims, penalties, damages, charges, demands or loss suffered or incurred by it as a result of any of those matters set out in paragraphs (a) and (b) above and this indemnity shall be limited accordingly.

To avoid doubt, the Customer's liability under this clause 9.2 is subject to the limitations on liability set out in clause 20.7 of Part A of this Agreement.

9.3 **Other Rights:**

Transpower's rights under clause 9.2 are in addition to any other rights Transpower may have under this Agreement.

10. INSURANCE

10.1 **Public Risk**:

The Customer must keep current at all times during the term of this Agreement (without in any way limiting the liability of the Customer under clauses 9.1 and 9.2), a policy of public risk insurance applicable to the Land and the Facilities for such amount as Transpower may from time to time reasonably require (being the amount which may be paid out arising out of any one single accident or event).

11. SIGNAGE

11.1 **Approved Signage Only**:

The Customer must not, without the prior consent of Transpower (such consent not to be unreasonably withheld), paint or exhibit any sign or notice on or about the Land or Facilities Area.

11.2 **Safety Signs:**

The Customer may, and if requested by Transpower, the Customer will affix signs or notices to warn the public of any danger in or about the Land or Facilities Area (such signs to be approved by Transpower (acting reasonably)).

ACCESS AND OCCUPATION SCHEDULE APPENDIX 1				
Connection location	**Land**	**Facilities**	**Location**	**Monthly Licence Charge (excl GST)**

SCHEDULE 7
CREDIT SUPPORT

1. Credit Rating:

Where and for so long as the Customer has:

(a) a long term credit rating of at least BB (Standard & Poors), Ba2 (Moody's Investor Service Inc) or BB (Fitch IBCA), or an equivalent rating from any other reputable rating agency which is acceptable to Transpower acting reasonably, and which rating is not on negative credit watch where either:

(1) the rating is at the minimum referred to above; or

(2) the rating agency has indicated it is considering assigning a rating below the minimum referred to above; or

(b) an acceptable credit rating as determined by Transpower acting reasonably, or by an expert, in accordance with appendix 1 of this Schedule (Credit Policy),

(an “Acceptable Credit Rating”), the Customer will not be required to provide credit support under clause 2.

2. **Credit Support:**

If at any time the Customer does not have an Acceptable Credit Rating then within 20 Business Days of a request by Transpower (which request will include confirmation of the amount of Transpower’s Counterparty Exposure), the Customer must provide, or (subject to clause 3) procure a third party to provide, to Transpower credit support in a form permitted by clause 4 for an amount not less than Transpower’s Counterparty Exposure.

3. **Credit Support Provider:**

Transpower is only obliged to accept credit support from a third party where the third party provider has an Acceptable Credit Rating.

4. **Types of Credit Support:**

Where credit support must be provided under this Schedule, the types of credit support which may be provided are:

(a) a bank guarantee that is in form and substance acceptable to Transpower acting reasonably, where a bank guarantee in the form of appendix 2 of this Schedule (Guarantee) will be acceptable to Transpower;

(b) a letter of credit that is in form and substance acceptable to Transpower acting reasonably, where a letter of credit in the form of appendix 3 of this Schedule (Letter of Credit) will be acceptable to Transpower;

(c) a third party guarantee that is in form and substance acceptable to Transpower acting reasonably, where a third party guarantee in the form of appendix 4 of this Schedule (Deed of Guarantee and Indemnity) will be acceptable to Transpower;

(d) a surety bond that is in form and substance acceptable to Transpower, where a bond in the form of appendix 5 of this Schedule will be acceptable to Transpower;

(e) a charge or security interest (as that term is defined in section 17 of the Personal Property Securities Act 1999) over assets acceptable to Transpower acting reasonably;

(f) a cash bond;

(g) any similar form of credit support acceptable to Transpower acting reasonably; or

(h) any combination of the above.

The Customer will determine which of the above type or types of credit support is to be provided.

5. **Changes to Level of Credit Support:**

If, at any time, Transpower becomes aware that credit support provided by the Customer:

(a) has become insufficient to cover; or

(b) exceeds,

Transpower's Counterparty Exposure Transpower will promptly notify the Customer of the occurrence in clause 5(a) or (b) and:

(c) in the case of clause 5(a), Transpower may require the Customer to provide additional credit support under clause 2; and

(d) in the case of clause 5(b), the Customer may require Transpower to release the excess credit support, in which event the parties will take all steps necessary to effect such reduction in the level of credit support within 20 Business Days of the Customer giving notice to Transpower requiring it to provide such a release.

6. **Cash Bond:**

If credit support is to be provided in the form of a cash bond, the following provisions will apply:

(a) **New Zealand Dollars**:

the cash bond is to be paid in New Zealand dollars;

(b) **Cash Bond on Trust**:

Transpower will hold the cash bond on trust for the Customer in accordance with the following rules:

(1) Transpower will establish a trust account with a registered bank in New Zealand (“the Bank”) for the purpose of holding cash bonds received from customers ("Trust Account");

(2) the Customer’s cash bond will be credited to a sub-account separate from other amounts deposited into the Trust Account and identified as relating to the Customer; and

(3) Transpower must obtain an acknowledgement from the Bank that the funds in the Trust Account are held on trust and that the Bank has no right of set-off or combination in relation to such funds;

(c) **Costs**:

Transpower may, at any time, require the Customer to pay to Transpower all reasonable costs and expenses of whatever nature incurred by Transpower in connection with opening and operating the Trust Account and holding any cash bond as credit support. The Customer will pay such costs and expenses within five Business Days of such a request; and

(d) **Interest:**

the Trust Account will bear interest at the best rate reasonably obtainable from time to time from the Bank. The amount of that interest will be paid by Transpower to the Customer, net of any withholdings required by law, in arrears on a quarterly basis.

7. **Release of Credit Support:**

Transpower is to release any credit support provided by the Customer under clause 2 (including repaying to the Customer the balance of any cash bond and any interest under clause 6(d)) within 10 Business Days from the date of:

(a) the Customer having obtained an Acceptable Credit Rating and providing notice to Transpower that it has obtained an Acceptable Credit Rating;

(b) the Customer providing alternative credit support that meets the requirements of this Schedule in substitution for credit support provided by the Customer under clause 2; or

(c) this Agreement terminating and all amounts due under this Agreement on the part of the Customer being paid.

8. **Application of Credit Support:**

Transpower may (but does not have an obligation to do so) on five Business Days notice to the Customer, call on any credit support provided by the Customer under clause 2 held by Transpower in respect of the Customer's performance of its obligations under this Agreement, and apply such credit support against any amounts due under this Agreement by or on behalf of the Customer and not paid within five Business Days from the Due Date.

9. **Credit Information:**

Where the Customer or any provider of credit support for the Customer seeks or has an Acceptable Credit Rating under clause 1(b), the Customer, within five Business Days from the date of receipt of any request by Transpower, is to provide all financial information about itself or such provider of credit support for the Customer (as applicable) as may be reasonably required by Transpower to enable it to assess the creditworthiness of the Customer or of that provider of credit support for the Customer. Information which may be required by Transpower includes:

(a) management accounts (consolidated and unconsolidated);

(b) audited financial statements (consolidated and unconsolidated);

(c) forecast financial information;

(d) copies of documents issued to shareholders;

(e) particulars of any litigation, arbitration, tax claim or administrative or other proceeding in relation to the Customer or any provider of credit support for the Customer which exceeds 10 percent of the total tangible assets of the Customer or provider of credit support for the Customer (as applicable); and

(f) particulars of any material adverse event affecting the ability of the Customer or any provider of credit support for the Customer to pay the Charges when due.

10. **Other Information:**

Without limiting clause 9, where the Customer or credit support provider has an Acceptable Credit Rating under clause 1(b), the Customer is to inform Transpower as soon as practicable on the happening of any of the following in relation to the Customer or any provider of credit support for the Customer:

(a) **Sale of Assets**:

the sale of more than 10 percent of its total tangible assets;

(b) **Increase in Assets Charged:**

any increase by 10 percent or more of the proportion of its total tangible assets charged under any security granted in favour of any other person; or

(c) **Material Adverse Event:**

any material adverse event affecting the ability of the Customer or provider(s) of credit support for the Customer to pay the Charges when due.

11. **External Credit Rating:**

Where the Customer or credit support provider has an Acceptable Credit Rating under clause 1(a), the Customer is to inform Transpower as soon as practicable on the happening of any change in its external credit rating or on being put on negative credit watch.

12. **Confidentiality of Credit Information:**

Clause 22 of Part A2 of this Agreement applies to any information provided by the Customer under clauses 9, 10 and 11 and, in addition, Transpower is not to disclose such information except to such of its employees, directors, officers and professional advisers who need to know for the purposes of assessing, or receiving advice on, any matter in relation to appendix 1 of this Schedule (Credit Policy) (including all Transpower internal decision making requirements). For the avoidance of doubt, clause 22.4 of Part A2 of this Agreement applies to disclosures by Transpower of such information in accordance with this clause 12.

APPENDIX 1
CREDIT POLICY

1. **Credit Rating Calculation**

Transpower will determine a credit rating for the Customer as set out below.

Based on externally sourced, industry related data, Transpower will assign a rating (either AA, A, BBB, BB or B) to the score obtained on each financial ratio referred to in the table below. This is then given a numeric value as follows:

AA or better = 5

A = 4

BBB = 3

BB = 2

B = 1

Each value is then multiplied by the weighting ascribed by Transpower, acting reasonably, to each financial ratio. The sum of the weighted values is calculated and a rating assigned on the basis of BB or better = Category A and worse than BB = Category B. If Transpower assigns a category A rating (being a 2 or better) the Customer will not be required to provide credit support. If Transpower assigns a category B rating (being less than 2) the Customer will be required to provide credit support.

The financial ratios used in this calculation are set out in the following table and are based on Standard & Poor's *Corporate Rating Criteria*.

Key Ratios	**Descriptions**
1. Pre-Tax Interest Coverage	Pre-tax income from continuing operations + interest expense Gross interest Pre-tax income from continuing operations = earnings before interest & tax + net interest Interest expense = interest incurred minus capitalised interest, plus amortisation of capitalised interest Gross interest = gross interest incurred before subtracting (1) capitalised interest, (2) interest income
2. Total Debt to Total Capital	Total debt Total capital

	Total debt = long term debt plus current maturities, commercial paper, and other short term borrowings Total capital = debt + equity
3. Funds from Operations Gross Interest Cover	Funds from operations Gross interest Funds from operations = net income from continuing operations plus depreciation, amortisation, deferred income tax and other non-cash expenses Gross interest = gross interest incurred before subtracting (1) capitalised interest, (2) interest income
4. Funds from Operations to Total Debt	Funds from operations Total debt Funds from operations = net income from continuing operations plus depreciation, amortisation, deferred income tax and other non-cash expenses Total debt = long term debt plus current maturities, commercial paper, and other short term borrowings
5. Net Cash Flow to Capital Expenditure	Net cash flow Capital expenditure Net cash flow = funds from operations less preferred and common dividends Capital expenditure = net capital expenditure

Transpower will score the Customer's financial ratios by reference to the Standard & Poors Key Utility Financial Ratios (being medians for US utilities) as set out in the latest Standard & Poors *Corporate Ratings Criteria* as amended or substituted from time to time, with the threshold between each Transpower rating being the mid-point of adjacent median ratings in the Standard & Poors Key Utility Financial Ratios. Transpower will assign a numeric value of 1 to any ratio which falls below the BB threshold rating.

2. **Credit Rating Adjustment**

The credit rating assigned to the Customer as indicated by the financial ratio calculation may be adjusted up or down on account of additional information which, in the reasonable view of Transpower, is important. This may include factors such as: market share, competitive position, regulatory risk, customer base, risk management systems, debt profile, operating efficiency, cost structure, management experience and quality, payment history, fixed asset quality and capacity, debtor quality, financial flexibility, developments in the industry which impact on credit risk.

3. **Expert**

If the Customer disputes:

(a) a credit rating assigned to it by Transpower under clause 1(b) of Schedule 7; or

(b) how the weightings of financial ratios are ascribed by Transpower in accordance with paragraph 1 of this appendix,

the Customer may by notice to Transpower refer the matter to an expert for determination in accordance with clause 21.6 of Part A2 of this Agreement. The procedure under clause 21.3 of Part A2 of this Agreement will commence from the date Transpower receives the notice referred to above.

APPENDIX 2

GUARANTEE

To: **TRANSPOWER NEW ZEALAND LIMITED ("Transpower")**

Attention: [name]

Dear Sir/Madam

1. [Bank] ("the Bank") refers to each and every obligation of [Customer's full name] ("the Principal") pursuant to the transmission benchmark agreement between Transpower and the Principal dated [ ] ("the Agreement") to pay amounts the Principal, now or at any time, owes to, and is invoiced by, Transpower together with default interest, if any, in relation to such amounts ("the Obligations") pursuant to the Agreement.

2. The Bank hereby unconditionally guarantees the payment to Transpower on demand of an amount specified in each such demand provided that:

   (a) the aggregate liability of the Bank under this guarantee will not exceed [ ] (the "Maximum Amount"); and

   (b) Transpower's demand is made in writing and is purported to be signed by an authorised signatory; and

   (c) a certificate purported to be signed by Transpower's authorised signatory and certifying that the Principal has failed, in whole or in part, to fulfil the Obligations accompanies Transpower's demand, which certificate will be conclusive proof of such failure.

3. This guarantee will not be affected, discharged or diminished by any act or omission which would, but for this provision, have exonerated a guarantor but would not have affected or discharged the Bank's liability had it been a principal debtor.

4. Subject to paragraph 5 below, this guarantee will continue in force until the date at which the Agreement has terminated and all amounts due under the Agreement on the part of the Principal are paid at which time Transpower will return this guarantee to the Bank.

[5. Notwithstanding anything else in this guarantee, the Bank may at any time pay Transpower the Maximum Amount less any amount or amounts the Bank may previously have paid under this guarantee or such lesser sum as Transpower may require. Upon payment of that sum, the liability of the Bank under this guarantee will cease and determine].

[Note: Bank to elect either this clause or the following clause as a method of cancellation].

[5. Notwithstanding anything else in this guarantee, the Bank may cancel this guarantee as to subsequent liability by giving ninety (90) days' notice in writing to Transpower; however, the Bank will remain liable with respect to the Obligations which relate to the period prior to the effective date of the ninety (90) days' notice.]

6. This guarantee may be assigned by Transpower without the Bank's consent.

7. This guarantee will be governed by and interpreted in all respects in accordance with New Zealand law and the parties hereto irrevocably submit to the non-exclusive jurisdiction of the courts of New Zealand.

8. The Bank appoints [insert name and address] to receive, for it and on its behalf, service of process of any proceedings in New Zealand at that address (and such appointment shall only be revocable if contemporaneously with such revocation the Bank appoints a substitute process agent in New Zealand acceptable to Transpower). Such service shall be completed on delivery to that process agent (whether or not it is forwarded to and received by the Bank). If for any reason such process agent ceases to be able to act as such, or no longer has an address in New Zealand, the Bank shall appoint a substitute process agent acceptable to Transpower, and deliver a copy of the new process agent's acceptance of that appointment, within thirty (30) days. The Bank irrevocably consents to any process in any proceedings being served by delivering a copy to the Bank at its address for service of notices set out in this clause.

   [Note: to be inserted and completed if the Bank does not have an address in New Zealand where legal proceedings may be served.]

9. This guarantee shall take effect and shall be executed as a Deed.

EXECUTED for and on behalf	)	
of [BANK]	)	
by its Attorneys	)	…….
[Print Names]	)	Signature(s)

…….

in the presence of:

…….

Signature

…….

Full Name

…….

Address

…….

Occupation

…….

Signature(s)

APPENDIX 3
LETTER OF CREDIT

To: **TRANSPOWER NEW ZEALAND LIMITED**

Attention: [name]

Dear Sir/Madam

We, [Bank] ("the Bank") hereby issue our irrevocable transferable standby letter of credit ("the Letter of Credit") as follows:

IRREVOCABLE TRANSFERABLE STANDBY LETTER OF CREDIT NO. [number] DATED [date]

The Account Party: [transmission counterparty] ("the Account Party")

Beneficiary: Transpower New Zealand Limited ("the Beneficiary")

Issued in Connection With: Each and every obligation ("the Obligations") of the Account Party to pay the amounts it, now or at any time, owes to, and is invoiced by, the Beneficiary together with default interest, if any, in relation to such amounts pursuant to the transmission benchmark agreement between the Beneficiary and the Account Party dated [ ] ("the Agreement").

Maximum Amount: [ ] less the amount of any sums drawn under this Letter of Credit.

Expiry: This Letter of Credit expires on the earliest of:

(a) the date at which the Agreement has terminated and all amounts due under the Agreement on the part of the Account Party are paid;

(b) the date of satisfaction of this Letter of Credit in accordance with its terms;

[(c) the date on which the Bank makes payment to the Beneficiary of the Maximum Amount either at its sole discretion or following demand by the Beneficiary under this Letter of Credit in accordance with its terms],

[Note: Bank to elect either this clause or the following clause as a method of cancellation.]

[(c) ninety (90) days after notice in writing of cancellation of this Letter of Credit as to subsequent liability has been given to Transpower; however, the Bank will remain

liable with respect to the Obligations which relate to the period prior to the effective date of the ninety (90) days' notice.]

("the Expiry Date").

Payable at: Sight.

Available at: [address]

By Drafts on: The Bank.

Enfaced: Drawn under [Bank] Irrevocable Standby Letter of Credit No. [number] dated [date].

Returnable to: The Bank upon expiry.

The proceeds of this Letter of Credit are transferable by the Beneficiary. A claim may be made under this Letter of Credit by delivering to the address at which this Letter of Credit is expressed to be available, by no later than [time] New Zealand time on or before the Expiry Date, draft drawn on the Bank (enfaced as specified above) accompanied by:

(a) This Letter of Credit; and

(b) A Certificate purported to be signed by an authorised signatory of the Beneficiary in the following form:

To [Bank] [date]

Transpower New Zealand Limited of [address] ("the Beneficiary") hereby makes claim under the [Bank] Irrevocable Standby Letter of Credit No [number] ("the Letter of Credit"). Words and expressions defined in the Letter of Credit will have the same meaning herein.

[Payer] ("the Account Party") has failed, in whole or in part, to fulfil the Obligations.

As at the date of this Certificate, the amount owed to the Beneficiary by the Account Party in respect of the Obligations is the sum of [amount outstanding].

Accordingly, the Beneficiary is entitled to claim and hereby requests payment by [date] of the amount of [amount claimed] to be credited to account number [Beneficiary's trust account number].

The signatory or signatories hereto is/are authorised by the Beneficiary to make the statements herein on behalf of the Beneficiary.

Signed…….

Authorised Signatory

This Letter of Credit is subject to the Uniform Customs and Practice for Documentary Credits (1993 Revision) International Chamber of Commerce Publication No. 500, except as otherwise provided in this Letter of Credit. Subject to that, this Letter of Credit will be governed by, and construed in accordance with, the laws of New Zealand, and the parties hereto irrevocably submit to the non-exclusive jurisdiction of the courts of New Zealand.

The Bank engages with the Beneficiary that drafts drawn under, and in compliance with, this Letter of Credit and, in aggregate, up to the Maximum Amount will be paid on presentation in the manner provided in this Letter of Credit.

The Bank appoints [insert name and address] to receive, for it and on its behalf, service of process of any proceedings in New Zealand at that address (and such appointment shall only be revocable if contemporaneously with such revocation the Bank appoints a substitute process agent in New Zealand acceptable to the Beneficiary). Such service shall be completed on delivery to that process agent (whether or not it is forwarded to and received by the Bank). If for any reason such process agent ceases to be able to act as such, or no longer has an address in New Zealand, the Bank shall appoint a substitute process agent acceptable to the Beneficiary, and deliver a copy of the new process agent's acceptance of that appointment, within thirty (30) days. The Bank irrevocably consents to any process in any proceedings being served by delivering a copy to the Bank at its address for service of notices set out in clause.

[Note: to be inserted and completed if the Bank does not have an address in New Zealand where legal proceedings may be served.]

This Letter of Credit shall take effect and be executed as a Deed.

EXECUTED for and on behalf	)	
of [BANK]	)	
by its Attorneys	)	…….
[Print Names]	)	Signature(s)

…….
in the presence of:

…….
Signature

…….
Full Name

…….
Address

…….
Occupation

APPENDIX 4

DEED OF GUARANTEE AND INDEMNITY

DATED

BY

(1) [ ] (the "Guarantor")

IN FAVOUR OF

(2) **TRANSPOWER NEW ZEALAND LIMITED** (the "Beneficiary")

1. GUARANTEE AND INDEMNITY

1.1 The Guarantor:

(a) unconditionally and irrevocably guarantees to the Beneficiary the due performance and observance by [transmission counterparty] ("the Debtor") of each and every obligation the Debtor may now or hereafter have to the Beneficiary to pay amounts it owes to, and is invoiced by, the Beneficiary (whether as principal or agent) together with default interest, if any, in relation to such amounts ("the Obligations") pursuant to the transmission benchmark agreement between Transpower and the Debtor dated [ ] ("the Agreement") and promises to pay to the Beneficiary on demand all amounts now or hereafter owing, due or payable by the Debtor to the Beneficiary in respect of the Obligations; and

(b) agrees as a primary obligation to indemnify the Beneficiary from time to time on demand from and against any loss incurred by the Beneficiary as a result of any of the Obligations being void, voidable or unenforceable for any reason whatsoever, whether or not known to the Beneficiary, the amount of such loss being the amount which the Beneficiary would otherwise have been entitled to recover from the Debtor.

1.2 This Deed is to be security in respect of each and every one of the Obligations but, nevertheless, the total amount payable by the Guarantor under this Deed will not exceed the aggregate of the [ ] (the "Maximum Amount") and any sums payable pursuant to clauses 1.3 and 9.1 of this Deed.

1.3 If any moneys payable by the Guarantor under this Deed are not paid on demand, the Guarantor will pay to the Beneficiary interest on such unpaid moneys (both before and after judgement) at the rate determined in accordance with clause 1.4 of this Deed from the date of demand to the date of their actual receipt by the Beneficiary calculated on a daily basis and capitalised as the Beneficiary will determine.

1.4 The rate at which interest will be calculated will be the aggregate of 5% per annum plus the then prevailing settlement bid rate for 90 day bills displayed on Reuters Screen BKBM at 10:45am on the date of demand or, if for any reason that rate is not displayed, the rate determined by the Beneficiary to be the nearest practicable equivalent.

2. PRESERVATION OF RIGHTS

2.1 The obligations of the Guarantor under this Deed are in addition to, and not in substitution for, any other security or guarantee which the Beneficiary may at any time hold in respect of the Obligations or any of them and may be enforced without the Beneficiary first having recourse to any such security and without the Beneficiary first taking steps or proceedings against the Debtor.

2.2 Neither the obligations of the Guarantor under this Deed nor the rights, powers and remedies conferred in respect of the Guarantor upon the Beneficiary by this Deed or by law will be discharged, impaired or otherwise affected by anything which might operate to discharge, impair or otherwise affect the same, including:

(a) the insolvency, liquidation or dissolution of the Debtor or any other person, the appointment of any receiver, manager, receiver and manager, inspector, trustee, statutory manager or other similar person in respect of the Debtor or any other person or any change in the Debtor's status, function, control or ownership;

(b) the Obligations or any of them, or the obligations of any person under any security or guarantee held in relation to the Obligations or any of them, being or becoming in whole or in part void, voidable, defective, illegal, invalid or unenforceable in any respect or ranking after any other security;

(c) any time, credit or other indulgence or other concession being granted or agreed to be granted by the Beneficiary to, or any composition or other arrangement made with or accepted from, the Debtor in respect of the Obligations or any of them or the obligations of any person under any security or guarantee held in relation to the same;

(d) any variation of the terms of any of the Obligations or of any security or guarantee (including this guarantee) held in relation to the same;

(e) any failure to realise or fully realise the value of, or any release, discharge, exchange or substitution of, any security or guarantee held in relation to the Obligations or any of them;

(f) any failure (whether intentional or not) to take, fully take or perfect any security now or hereafter agreed to be taken by the Beneficiary in relation to the Obligations or any of them; and

(g) any other act, event or omission which, but for this clause 2.2, would or might operate or discharge, impair or otherwise affect any of the obligations of the

Guarantor under this Deed or any of the rights, powers or remedies conferred upon the Beneficiary by the Agreement or by law.

2.3 If any payment to the Beneficiary under this Deed is avoided by law, the Guarantor's obligation to have made such payment will be deemed not to have been affected or discharged and the Guarantor will on demand indemnify the Beneficiary against all costs sustained or incurred by the Beneficiary as a result of it being required for any reason to refund all or part of any amount received or recovered by it in respect of such payment and will in any event pay to the Beneficiary on demand the amount so refunded by it. The Beneficiary and the Guarantor will, in any such case, be deemed to be restored to the position in which each would have been and will be entitled to exercise the rights they respectively would have had if that payment had not been made.

2.4 The Beneficiary is not obliged before exercising any of the rights, powers or remedies conferred upon it in respect of the Guarantor by law to make any demand on the Debtor, take any action or obtain judgment in any court against the Debtor, make or file any claim or prove in any liquidation of the Debtor or enforce or seek to enforce any security or guarantee taken in respect of the Obligations.

2.5 After a demand has been made by the Beneficiary under this Deed, and so long as the Guarantor is under any actual or contingent liability under this Deed, the Guarantor will not:

(a) exercise in respect of any amount paid by the Guarantor under this Deed any right of subrogation or any other right or remedy which the Guarantor may have in respect of such amount paid;

(b) except with the Beneficiary's consent in writing, claim or receive payment of any other moneys for the time being due to the Guarantor by the Debtor or exercise any other right or remedy which the Guarantor may have in respect of the same; or

(c) unless so required by the Beneficiary, prove in the liquidation of the Debtor in competition with the Beneficiary for any moneys owing to the Guarantor by the Debtor on any account whatsoever.

Any moneys obtained by the Guarantor from the Debtor with such consent or as so required or in breach of this clause will, in each case, be held by the Guarantor upon trust to pay such moneys to the Beneficiary in or towards discharge of the Guarantor's obligations under this Deed.

2.6 Any moneys received by the Beneficiary which may be applied in or towards discharge of any of the obligations of the Guarantor under this Deed will be regarded as a payment in gross so that, in the event of the liquidation of the Guarantor, the Beneficiary may prove in the liquidation for the whole of such moneys.

3. REPRESENTATIONS AND WARRANTIES

3.1 The Guarantor represents that:

(a) it is duly incorporated and validly existing under the laws of [New Zealand], capable of suing and being sued and has the power to enter into and perform this Deed and has taken all necessary corporate action to authorise it to enter into, execute, deliver and perform its obligations under this Deed;

(b) its entry into, execution, delivery and performance of this Deed will not contravene any law or regulation to which the Guarantor is subject or any provision of its constitutional documents and all things (including the obtaining of consents) requisite for such entry, execution, delivery and performance have been taken, fulfilled and done and are in full force and effect;

(c) no obligation of the Guarantor under this Deed is secured by, and the execution, delivery and performance of this Deed will not result in the existence of, or oblige it to create, any mortgage, charge, pledge, lien or other encumbrance over any of its present or future revenues or assets; and

(d) the execution, delivery of and performance of the Guarantor's obligations under this Deed will not cause the Guarantor to be in breach of or in default under any agreement binding on the Guarantor or any of its assets and no material litigation or administrative proceeding before, by or of any court or governmental authority is pending or (so far as the Guarantor knows) threatened against the Guarantor or any of its assets which, if decided against the Guarantor, would have a material adverse effect on the ability of the Guarantor to meet any or all of the obligations hereunder.

4. PAYMENTS

4.1 All payments to be made by the Guarantor to the Beneficiary under this Deed will be made without set-off or counterclaim and without any deduction or withholding whatsoever. If the Guarantor is obliged by law to make any deduction or withholding from any such payment, the amount due from the Guarantor in respect of such payment will be increased to the extent necessary to ensure that, after the making of such deduction or withholding, the Beneficiary receives a net amount equal to the amount the Bank would have received had no such deduction or withholding been required to be made.

5. CONTINUING SECURITY

5.1 This Deed will be a continuing security to the Beneficiary in respect of each and every one of the Obligations and will not be (or be construed so as to be) discharged by any intermediate discharge or payment of or on account of the Obligations or any settlement of accounts between the Beneficiary and the Debtor or anyone else.

6. TERMINATION

[6.1 Notwithstanding anything else in this Deed, the Guarantor may at any time pay to the Beneficiary the Maximum Amount less any amount or amounts the Guarantor may previously have paid under this Deed or such lesser sum as the Beneficiary may require. Upon payment of that sum, the liability of the Guarantor under this Deed will cease and determine.]

[Note: Guarantor to elect either this clause or the following clause as a method of cancellation.]

[6.1 Notwithstanding anything else in this Deed the Guarantor may cancel this Deed as to subsequent liability by giving ninety (90) days' notice in writing to the Beneficiary; however, the Guarantor will remain liable with respect to the Obligations which relate to the period prior to the effective date of the ninety (90) days' notice.]

7. ASSIGNMENT

7.1 This Deed may be assigned by the Beneficiary without the Guarantor's consent.

8. NOTICES

8.1 Any demand to be made on the Guarantor by the Beneficiary under this Deed may be made in writing and delivered to the address set out below or to any other address in New Zealand from time to time notified pursuant to clause 8.2. The Guarantor's address, as at the date of this Deed is: [address]

8.2 The Guarantor will immediately notify the Beneficiary of any change in the above address.

9. COSTS AND EXPENSES

9.1 The Guarantor will on demand indemnify and hold harmless the Beneficiary from and against all costs and expenses (including legal fees and any taxes or duties) incurred by the Beneficiary in the enforcement and protection of its rights under this Deed.

10. GOVERNING LAW

10.1 This Deed is governed by, and construed in accordance with New Zealand law, and the Guarantor hereby irrevocably submits to the non-exclusive jurisdiction of the New Zealand Courts.

11. PROCESS AGENT

11.1 The Guarantor appoints [insert name and address] to receive, for it and on its behalf, service of process of any proceedings in New Zealand at that address (and such appointment shall only be revocable if contemporaneously with such revocation the Guarantor appoints a substitute process agent in New Zealand acceptable to the Beneficiary). Such service shall be completed on delivery to that process agent (whether or not it is forwarded to and received by the Guarantor). If for any reason such process agent ceases to be able to act as such, or no longer has an address in New Zealand, the Guarantor shall appoint a substitute process agent acceptable to the Beneficiary, and deliver a copy of the new process agent's acceptance of that appointment, within thirty (30) days. The Guarantor irrevocably consents to any process in any proceedings being served by delivering a copy to the Guarantor at its address for service of notices set out in this clause.

[Note: to be inserted and completed if the Guarantor does not have an address in New Zealand where legal proceedings may be served.]

This Deed shall take effect and be executed as a Deed.

EXECUTED for and on behalf)
of [Guarantor])
in the presence of:)

…… ……
Director Director/Authorised Signatory

……
Signature

……
Full Name

……
Address

……
Occupation

Note I: If two directors sign, no witness is necessary. If a director and authorised signatory sign, both signatories are to be witnessed. If the director and authorised signatory are not signing together, a separate witness will be necessary for each signature.

Note II: If the Guarantor is incorporated outside of New Zealand, insert an appropriate execution clause for the country of incorporation.

APPENDIX 5
SURETY BOND

To: **TRANSPOWER NEW ZEALAND LIMITED ("Transpower")**

Bond Number:

We, [name of transmission counterparty] as Principal, and [name and address of Surety], as Surety, are held and firmly bound to Transpower, a corporation organised and existing under the laws of New Zealand, its successors and assigns, in the amount of [amount in words] New Zealand dollars (NZ$[ ]), lawful money of New Zealand for the payment of which the Principal and Surety, their heirs, executors, administrators, successors and assigns are hereby jointly and severally bound.

The Principal has obligations (the "Obligations") pursuant to the transmission benchmark agreement between Transpower and the Principal dated [ ] ("the Agreement") to pay Transpower amounts invoiced to it by Transpower;

The Surety agrees to deliver payment to Transpower of amounts invoiced to the Principal (together with any default interest payable in respect of those invoiced amounts) forthwith upon receipt of written demand for payment issued by a purported authorised representative of Transpower. Such written demands to be delivered to the Surety at its above address and to certify that the Principal has failed, in whole or in part, to fulfil the Obligations.

The Surety will not be liable hereunder for a larger amount, in the aggregate, than the amount of this Bond; and

[The Surety may at any time pay to Transpower the amount of this Bond less any amount or amounts the Surety may previously have paid under this Bond or such lesser sum as Transpower may require. Upon payment of that sum, the liability of the Surety under this Bond will cease and determine; and]

[Note: Surety to elect either this proviso or the following proviso as a method of cancellation.]

[This Bond may be cancelled by the Surety as to subsequent liability by giving ninety (90) days notice in writing to Transpower; however, the Surety will remain liable with respect to the Principal's Obligations which relate to the period prior to the effective date of the ninety (90) days notice; and]

This Bond will not be affected, discharged or diminished by any act or omission which would, but for this provision, have exonerated a surety but would not have affected or discharged the Surety's liability had it been a principal debtor; and

This Bond will be governed by and interpreted according to, the laws of New Zealand, and the Principal and the Surety thereby agree to submit to the non-exclusive jurisdiction of the Courts of New Zealand.

This Bond may be transferred or assigned by Transpower without the Surety's consent. Upon cancellation, the Bond will be returned to the Surety.

[The Surety appoints [insert name and address] to receive, for it and on its behalf, service of process of any proceedings in New Zealand at that address (and such appointment shall only be recoverable if contemporaneously with such revocation the Surety appoints a substitute process agent in New Zealand acceptable to Transpower. Such service shall be completed on delivery to that process agent (whether or not it is forwarded to and received by the Survey). If for any reason such process agent ceases to be able to act as such or no longer has an address in New Zealand the Surety shall appoint a substitute process agent acceptable to Transpower, and deliver a copy of the new process agent's acceptance of that appointment, within thirty (30) days. The Surety irrevocably consents to any process in any proceedings being served by delivering a copy to the Guarantor at its address for service of notices set out in clause.]

[Note: to be inserted and completed if the Surety does not have an address in New Zealand where legal proceedings may be served.]

This Surety Bond shall take effect and be executed as a Deed

EXECUTION CLAUSE

SCHEDULE 8
CONNECTION CODE

1. INTERPRETATION

1.1 Preliminary:

Nothing in this Connection Code limits or derogates from any provision of the Agreement.

1.2 Definitions:

In this Connection Code, unless the context otherwise requires:

Earth Fault Factor

means at a given location of a three-phase electrical power system, and for a given system configuration, the ratio of:

(a) the highest r.m.s. phase-to-earth power frequency voltage on a healthy phase during a fault to earth affecting one or more phases at any point on the system; to

(b) the r.m.s value of phase-to-earth power frequency voltage which would be obtained at the given location in the absence of any such fault (IEC 50 (604-03-06)).

Equipment

means any of:

(a) **assets** or a **network** physically connected to the **grid**;

(b) **assets** or a **network** forming part of the **grid**;

(c) **assets** or a **network** not physically connected to the **grid** but which, in the reasonable opinion of **Transpower**, can affect the management, security, operation or performance characteristics of the **grid**; or

(d) other Equipment not physically connected to the **grid** but which, in the reasonable opinion of **Transpower**, can affect the security or operation of the **grid**, or power quality.

Power Factor

means MW divided by MVA at a Point of Service where the MW and MVA are measured.

Safety Manual - Electricity Industry (SM-EI)

means the Safety Manual – Electricity (SM-EI) 2004, published by the Electricity Engineers' Association (as may be amended from time to time).

Secondary Plant

all Equipment that is not **primary transmission equipment**.

1.3 Interpretation:

References to **Transpower** are references to **Transpower** in its capacity as **grid owner** as a party to the Agreement. References to the Customer are references to the Customer in its capacity as a party to the Agreement.

1.4 Procedure for obtaining Transpower's agreement to non compliance:

Transpower may enter into an agreement with the Customer as to the manner and extent by which the Customer need not comply with this Connection Code in accordance with the process set out in Appendix A. If the agreement would have a material adverse effect on any other **designated transmission customer** or end use customer, **Transpower** and the Customer must first comply with **rules** 5.1 to 5.4 of section II of part F, as applicable, before entering into the agreement.

If an agreement is entered into, **Transpower** and the Customer must comply with that agreement. A non-confidential summary of that agreement must be made publicly available.

1.5 Customer's responsibilities for third parties:

(a) The Customer must ensure that any third party who has Equipment directly connected to the Customer's Equipment, but not to the **grid**, that may adversely affect the reliability, availability or integrity of the **grid** complies with the obligations on the Customer as set out in this Connection Code.

(b) For the purposes of this clause, but without limiting the application of subclause (a), any **generating units** with a combined installed capacity of greater than 1MW, or motors with a combined installed capacity of greater than 1MW capacity will be treated as having the potential to adversely affect the reliability, availability or integrity of the grid, unless **Transpower** and the Customer agree that a higher capacity is more appropriate taking into account the load at a **point of connection**.

1.6 Customer's responsibilities when other designated transmission customer

If the Customer is requested by another **designated transmission customer** or **Transpower** to agree to the bonding of that **designated transmission customer's** earthing systems as required by the equivalent clause to clause 4.2(d)(4) that applies under any **transmission agreement** between the Customer and **Transpower**, the Customer must not unreasonably withhold that agreement.

2. CONNECTION REQUIREMENTS

2.1 Requirements for equipment capability:

As and when the Customer must provide an **asset capability statement** to the **system operator** under the **rules**, the Customer must also provide the same **asset capability statement** to **Transpower** (in the same manner in which it provides the **asset capability statement** to the **system operator**) but including the information specified in clause 2.2 (b), (c) and (d).

2.2 Additional information:

The Customer must provide to **Transpower**, in a format specified by **Transpower** (acting reasonably) from time to time:

(a) as and when it must provide an **asset capability statement** to the **system operator** under the **rules**, the information referred to in subclauses 2.2(b), (c) and (d) in respect of that Equipment.

(b) in respect of its Equipment:

(1) the normal and emergency limits within which the Equipment is intended to operate;

(2) the information as to the limitations in the operation of the Equipment that **Transpower** requires (acting reasonably) for the safe and efficient management of the **grid**; and

(3) all modelling data in respect of Equipment capability which **Transpower** requires (acting reasonably) for planning purposes;

(c) sufficient information concerning the Equipment at the **grid interface** to verify compliance with this Connection Code and to enable **Transpower** to approve the connection; and

(d) details of protection systems, including settings, to ensure the requirements of clause 4.2(e) are met.

2.3 Special requirements:

If the Customer proposes to connect Equipment to the **grid**, or to **assets** connected to the **grid**, or to make changes to Equipment connected to the **grid** or to **assets** connected to the **grid** and **Transpower**:

(a) acting reasonably and after having consulted other Customers who may be affected by the connection of the Equipment to the **grid**, or the changes to the Equipment or otherwise; or

(b) having regard to the environmental conditions in which the Equipment at the **grid interface** is located;

identifies special requirements for the Equipment, **Transpower** may notify the Customer of the special requirements and the Customer must ensure those special requirements are complied with to **Transpower's** satisfaction (acting reasonably).

2.4 Pre-commissioning requirements:

(a) Before the Customer commissions any Equipment to be connected to the grid, or any asset connected to the **grid**, the Customer must obtain **Transpower's** written approval (not to be unreasonably withheld):

(1) to the design and specifications of the Equipment;

(2) that the requirements of this Connection Code can be met;

(3) that upon connection of the Equipment, the reliability, availability and integrity of the **grid** can be maintained; and

(4) that the proposed connection of the Equipment can be made reliably and safely without any material adverse affect on the management, security or operation of the **grid**.

(b) In considering whether or not to grant approval **Transpower** may (amongst other things) consider:

(1) the effect of daily, seasonal, annual and likely long-term variations in supply and demand levels;

(2) the effect of contingency conditions; and

(3) the effect of any future changes required to the **grid**, or to other Equipment.

2.5 Requirements for commissioning or testing of equipment:

(a) The Customer must:

(1) as and when the Customer must provide a commissioning or test plan to the **system operator** under the **rules**, also provide a commissioning or test plan to **Transpower** that complies with clause 2.6; and

(2) if the Equipment is not connected to the **grid** but is connected to an asset connected to the **grid** and in the reasonable opinion of **Transpower**, could affect the security or operation of the **grid**, the Customer must provide to **Transpower** a commissioning or test plan that complies with clause 2.6.

(b) **Transpower** must, as and when required to provide a commissioning or test plan under the **rules** in respect of the Connection Assets, also provide a commissioning or test plan to the Customer that complies with paragraphs (a) to (d) of clause 2.6.

2.6 Requirements of a commissioning or test plan:

The commissioning or test plan required under clause 2.5 must:

(a) include a timetable containing the sequence of events necessary to connect the Equipment and conduct any test;

(b) contain the protection settings to be applied before livening of the Equipment;

(c) contain the procedures for commissioning or testing the Equipment that safeguards against risk of injury to personnel or damage to any Equipment and to the ability of **Transpower** and the Customer to comply with its obligations under the Agreement;

(d) have been prepared by the Customer in consultation with **Transpower** or by **Transpower** in consultation with the Customer, as the case may be; and

(e) in the case of a commissioning or test plan provided by the Customer, be approved in writing by **Transpower** (such approval not to be unreasonably withheld).

2.7 Customer to comply with commissioning or test plan:

The Customer in commissioning or undertaking any testing of the Equipment must comply with the commissioning or test plan approved by **Transpower** in accordance with clause 2.6.

2.8 Responsibility following approval:

The Customer must ensure that the construction or manufacture of Equipment does not depart from the design or specifications of Equipment approved by **Transpower** unless the departure is approved in writing by **Transpower**. **Transpower** will not withhold such approval unreasonably.

2.9 Final approval:

On completion of connection of any Equipment to the **grid**, including to any associated **grid interface**, the Customer must obtain final approval of such connection in writing from **Transpower** (such approval not to be unreasonably withheld) before the Equipment commences service.

2.10 Withdrawal:

Transpower may withdraw any approval provided by **Transpower** (acting reasonably) if the Equipment is not as described in the information provided under clauses 2.2 and 2.3.

2.11 Co-operation:

The Customer must comply with any reasonable direction of **Transpower** to change the connection of any Equipment to the **grid** (or the Equipment itself), if the connection

or the Equipment may adversely affect the performance of the **grid** or the Equipment of other customers.

2.12 New Connections:

Where the Customer wishes **Transpower** to provide a new connection, it must make a written request to **Transpower** and **Transpower** must within 20 Business Days of the Customer's request provide an initial response in writing to the Customer that sets out the process to be followed by **Transpower** and the Customer and a proposed timetable for provision of the new connection.

3. GENERAL REQUIREMENTS

3.1 Published requirements:

Transpower must ensure that its Connection Assets (and, in the case of subclauses (b) and (c), the operation of its Connection Assets) and the Customer must each ensure that its Equipment (and, in the case of subclauses (b) and (c), the operation of its Equipment):

(a) is designed, tested and commissioned in accordance with **good electricity industry practice**;

(b) complies with the Safety Manual - Electricity Industry (SM-EI); and

(c) complies with all relevant legislation.

4. TECHNICAL REQUIREMENTS

4.1 Instrumentation and control circuits:

The Customer:

(a) may connect an instrumentation and control circuit to secondary plant at the **grid interface** provided:

(1) the **grid** is not adversely affected;

(2) the safety of the public and any other persons is not adversely affected; and

(3) the Customer has prior written approval from **Transpower** (such approval not to be unreasonably withheld).

(b) must provide a means by which both the Customer and **Transpower** may disconnect each instrumentation or control circuit connected to the **grid**; and

Transpower must ensure that each instrumentation and control circuit connected at the **grid interface** is designed to withstand the hazards of earth potential rise and

induced currents and voltages appropriate to the location of the secondary circuit and comply with the requirements of clause 4.2(d).

4.2 Requirements at the grid interface:

(a) Grid interface switchgear to be provided:

The Customer or **Transpower** must provide for each **Point of Connection**:

(1) a single location where it is practicable, in accordance with **good electricity industry practice**, for the owner of the **circuit-breaker** to operate each **circuit-breaker** by remote control;

(2) the operational status of each **circuit-breaker** to be signalled to the single location in (1) from which the **circuit-breaker** is controlled; and

(3) Equipment to isolate and earth its own Equipment each **Point of Connection.**

(b) Insulation co-ordination:

Transpower and the Customer must each ensure:

(1) the insulation of Equipment at the **grid interface** is co-ordinated with the insulation of Equipment to which it is to be connected;

(2) that transient, dynamic, continuous and any other over-voltages are calculated, analysed and taken into account in accordance with **good electricity industry practice** and that the recommendations of IEC 71 (Insulation Co-ordination) are complied with;

(3) that the rated insulation level and rated short duration power frequency withstand voltage meets the levels specified in Appendix B Table B3; and

(4) that for any connection of Equipment to the **grid** at a voltage of 220 kV and for each **Point of Connection**, an Earth Fault Factor of not more than 1.4 (an effectively earthed system) is maintained. For the purposes of this clause 4.2(b)(4), any Equipment connected to the **grid** that operates at a nominal voltage of less than 220 kV, is deemed to have an Earth Fault Factor of greater than 1.4 (non-effectively earthed). Any connection of such Equipment to the **grid** must not increase the Earth Fault Factor to an extent which leads to over-voltages which have an adverse effect on the management or operation of the **grid**.

(c) **Rating of equipment at the grid interface:**

Transpower and the Customer must each ensure that:

(1) the normal current ratings of Equipment at the **grid interface** are sufficient to carry currents at all reasonably foreseeable ratings;

(2) neither the short-circuit current ratings nor the effects of the earthing of the Equipment interfere with, or adversely affect, the management or operation of the **grid**; and

(3) it modifies or replaces the Equipment or changes the configuration of the Equipment before any of the short-circuit current ratings of the Equipment are exceeded, in order to ensure those ratings are not exceeded.

(d) **Earthing of the grid interface:**

Transpower and the Customer must ensure that:

(1) the earthing arrangements for the **grid interface** do not adversely affect the safety of any person;

(2) the earthing arrangements for the **grid interface** allow the efficient management of protection systems;

(3) the Equipment has an earthing arrangement that keeps hazards within limits required by **good electricity industry practice** without requiring bonding to the earthing systems of any other **designated transmission customer**;

(4) without derogating from the foregoing, where bonding to the earthing systems of any other **designated transmission customer** is beneficial, undertake the bonding to the earthing system of that other **designated transmission customer** as agreed by the **designated transmission customer**; and

(5) earthing of the Equipment at the **grid interface** is sufficient to withstand earth fault currents (including the contribution from the **grid**) up to the limits specified in Appendix B Table B2 for at least 3 seconds.

(e) **Protection of equipment and the grid:**

Transpower and the Customer must each ensure that the Equipment is designed and maintained so that, for fault impedances of less than one ohm on either the **grid** or at the **grid interface**, the following applies:

(1) the fault will be cleared by main protection systems within the design fault clearance time specified in Appendix B table B4;

(2) the fault clearance time for back up protection systems, including high impedance faults, is as short as reasonably practicable and does not adversely affect other Equipment, and must not exceed the final fault clearance time in Appendix B table B4; and

(3) no fault on the **grid assets** or on the **grid interface** persists for longer than the final fault clearance time stated in Appendix B table B4.

(f) **Common and shared facilities and equipment:**

If **Transpower** and the Customer share facilities or Equipment, each shall:

(1) physically secure the facilities or the Equipment against unauthorised access or operation by a third party;

(2) provide electrically safe Equipment in accordance with **good electricity industry practice**; and

(3) provide facilities and Equipment that comply with AS/NZS 1170 Structural design actions.

(g) **Expected minimum and maximum fault levels:**

Transpower must publish annually a 10 year forecast of the expected minimum and maximum fault level at each Point of Service.

4.3 Specific requirements for generating units:

If the Customer is a **generator**, the Customer must ensure that the connection at the **point of connection** of its **generating units** has an Earth Fault Factor complying with the requirements of clause 4.2(b)(4) and the earthing of the generating unit and associated Equipment ensures the reliable operation of protection systems and safe management of the **grid**. This requirement also applies in respect to the **grid interface** for any **network** to which a generating unit is connected and may affect the management of the **grid**.

4.4 Minimum power factor:

(a) The Customer must ensure that its Equipment does not unreasonably draw on the reactive power resources of the **grid** during each regional peak demand period. If **electricity** is being drawn off the **grid**, the Power Factor at any Point of Service the Customer must:

(1) up until 31 March 2010, in the case of demand, maintain a Power Factor of not less than 0.95 lagging at any Point of Service during each relevant regional peak demand period.

(2) from 1 April 2010, in the case of demand, maintain a Power Factor of not less than:

(i) 1.0 (unity) at each relevant Point of Service during each relevant regional peak demand period in the Upper North Island Region and the Upper South Island Region; and

(ii) 0.95 lagging at each relevant Point of Service during each relevant regional peak demand period in the Lower North Island Region and the Lower South Island Region.

(b) For the purposes of this clause:

(1) the regional peak demand periods and regions are as defined in Schedule F of the **transmission pricing methodology**; and

(2) the relevant regional peak demand period is the regional peak demand period for the region in which the Point of Service is located.

4.5 Provision for effects of disconnection:

The Customer must each ensure that it manages the consequences of an unplanned disconnection of any of its Equipment from the **grid assets** in accordance with **good electricity industry practice**.

4.6 Maintenance:

Transpower and the Customer must each maintain its Equipment so that it always complies with this Connection Code.

4.7 Harmonic levels:

Transpower and the Customer must each comply with:

(a) the New Zealand Electrical Code of Practice for harmonic levels (NZECP 36.1993), as amended from time to time; or

(b) any other equivalent or similar AS/NZS, IEC, IEEE standard; or

(c) any other requirements specified by **Transpower** (acting reasonably) that cover similar matters to those set out in NZECP 36.1993.

4.8 Voltage flicker levels:

Transpower and the Customer must each comply with the Australian Standard (AS2279.4 191) for voltage levels as amended from time to time or such other local or international standards that may be reasonably applicable.

4.9 Voltage imbalance of less than 1%:

Transpower and the Customer must each use reasonable endeavours to maintain negative sequence voltage of less than 1% and to ensure that negative sequence voltage will be no more than 2% in any part of the **grid**.

5. OPERATING REQUIREMENTS

5.1 Operational performance of equipment:

Transpower and the Customer must each ensure that its Equipment:

(a) has no adverse effect on the **grid** or the ability of **Transpower** to manage the **grid**;

(b) can be operated within the minimum and maximum system voltages set out in Appendix B, Table B1;

(c) has no adverse effect on other Customers or their ability to manage their Equipment;

(d) is designed and installed so that maintenance can be carried out;

(e) does not present a safety hazard to **Transpower** or other Customers (or their respective employees and agents) or the general public;

(f) does not cause **Transpower** or the Customer to breach any legislation;

(g) performs its intended function to the standard required by this Connection Code at the maximum and minimum short-circuit currents resulting from any reasonably foreseeable configuration of the New Zealand electricity system;

(h) does not cause the maximum short circuit power and current limits specified in Appendix B, Table B2 to be exceeded on or nearby to the **grid**;

(i) is capable of being operated and operates within the limits stated in the **asset capability statement** and other information provided under clauses 2.1 and 2.2 respectively;

(j) complies with this Connection Code; and

(k) meets any other requirements imposed by **Transpower** in writing acting reasonably and in accordance with **good electricity industry practice**.

6. MONITORING REQUIREMENTS

6.1 Monitoring requirements:

Transpower and the Customer must each monitor the performance of its Equipment in accordance with **good electricity industry practice**.

7. INFORMATION REQUIREMENTS

7.1 For approval of the grid interface:

(a) In addition to information provided in the **asset capability statement** and the other information provided under clauses 2.2 and 2.3 respectively, the Customer must provide **Transpower** as and when requested by **Transpower** (acting reasonably) with:

(1) sufficient information concerning the **grid interface** to verify compliance with this Connection Code and to enable **Transpower** to approve the connection at the **grid interface**;

(2) details of protection systems, including settings, to ensure the requirements of clause 4.2 (ef) are met; and

(b) **Transpower** must provide the Customer as and when requested by the Customer (acting reasonably) with details of protection systems relating to the Connection Assets, including settings, to ensure the requirements of clause 4.2(e) are met.

7.2 For revisions to information previously supplied:

(a) Whenever revised information as to the performance of Equipment is obtained by the Customer, the Customer must provide to **Transpower** a revised **asset capability statement** and any revisions to the other information required under clauses 2.2 and 2.3 respectively, as soon as reasonably practicable.

(b) Whenever revised information as to the performance of a Connection Asset is obtained by **Transpower, Transpower** must provide to the Customer a revised **asset capability statement** and any revisions to the other information required under clauses 2.2 and 2.3 respectively, as soon as reasonably practicable.

7.3 Supporting information:

(a) The Customer must maintain up to date manuals or protocols required in accordance with **good electricity industry practice** for the operation of its Equipment.

(b) **Transpower** must maintain up to date manuals or protocols required in accordance with **good electricity industry practice** for the operation of its Connection Assets.

7.4 Equipment records to be kept:

(a) The Customer must in accordance with **good electricity industry practice** maintain records for its Equipment that, in its discretion, either:

(1) record the performance of its Equipment as monitored by the Customer over each consecutive three month period for the purpose of verifying or otherwise that the Equipment meets the requirements of this Connection Code; or

(2) record any tests undertaken in accordance with **good electricity industry practice** that establish that the Equipment meets the requirements of this Connection Code.

(b) **Transpower** must in accordance with **good electricity industry practice** maintain records for its Connection Assets that, in its discretion, either:

(1) record the performance of its Connection Assets as monitored by the **Transpower** over each consecutive three month period for the purpose of verifying or otherwise that the Connection Assets meets the requirements of this Connection Code; or

(2) record any tests undertaken in accordance with **good electricity industry practice** that establish that the Connection Assets meets the requirements of this Connection Code.

7.5 Access to records or equipment:

The Customer must as soon as reasonably practicable following written notice by **Transpower**, provide to **Transpower**:

(a) access to any records of the Customer's monitoring or testing of the performance of any Equipment carried out in accordance with clause 7.4; and

(b) access to inspect any Equipment;

as **Transpower** requires (acting reasonably).

7.6 Status of Transpower approval:

Any approval by **Transpower** provided to the Customer does not relieve the Customer from its obligations to meet the requirements of this Connection Code.

8. PERFORMANCE REQUIREMENTS FOR SCADA

The Customer must ensure that the interface between its Equipment and the **grid** for the exchange of data provided by SCADA must comply with **Transpower's** policy for the same as published from time to time in consultation with **designated transmission customers**.

APPENDIX A: TRANSPOWER'S AGREEMENT TO NON-COMPLIANCE WITH THE CONNECTION CODE

1. APPLICATION AND SUPPORTING INFORMATION

The Customer may apply in writing to **Transpower** for **Transpower's** agreement authorising non-compliance with this Connection Code.

An application shall:

(a) Specify the non-compliance:

specify the clauses of the Connection Code for which **Transpower's** agreement to non-compliance is sought;

(b) Provide supporting information:

provide information in support of the application with reasonable particularity (including information as to the capability of the non-compliant Equipment);

(c) Describe any remedial action to be undertaken:

describe any remedial action to be undertaken to ensure compliance with this Connection Code;

(d) Specify required term:

specify the term of the agreement which is sought; and

(e) Identify confidential information:

identify any information for which confidentiality is sought on the ground that it would, if disclosed, unreasonably prejudice the commercial position of the Customer (or other person who is the subject of the information) or on the ground that it is information that is subject to an obligation of confidence, and the period for which confidentiality is sought.

2. TRANSPOWER OBLIGATIONS ON RECEIPT OF APPLICATION

Within 5 business days of receipt of the application made under clause 1 of this appendix, **Transpower** must provide the Customer with an estimate of the time it will take to consider the application and the costs associated with processing the application:

3. RIGHTS AND OBLIGATIONS DURING THE PROCESSING OF APPLICATIONS

(a) **Reasonable endeavours:**

Transpower will use reasonable endeavours to consider and decide whether or not to agree to the application within the estimated time and costs provided in accordance with clause 2 of this appendix.

(b) **Transpower to act reasonably:**

Transpower will act reasonably in deciding whether or not to enter into an agreement under this Appendix A, and in determining the terms and conditions on which it is prepared to enter into an agreement.

(c) **Additional information:**

Transpower may require the Customer to provide information in support of the application and the Customer shall provide the same in order for the application to be considered.

(d) **Withdrawal of application:**

If the Customer withdraws an application, it must on demand pay the actual and reasonable costs incurred by **Transpower** up to and including the date of withdrawal of the application in considering the application.

4. OBLIGATION OF THE CUSTOMER TO PAY COSTS

The Customer must on demand pay **Transpower's** actual and reasonable costs incurred in considering an application under this appendix.

5. AGREEMENT

Transpower will notify the Customer of the outcome of any application by it for **Transpower's** agreement to non-compliance with this Connection Code but if the application is granted there shall be no legally binding agreement between **Transpower** and the Customer unless and until they enter into a formal and final supplementary written agreement signed by each of them, which is expressed to be legally binding as between them. Such an agreement shall be supplementary to and form part of the Agreement.

APPENDIX B. VOLTAGE AND FAULT LEVELS

Table B1: Maximum and Minimum Voltage Limits

Nominal Voltage (kV)	Maximum System Voltage (kV)	Minimum System Voltage (kV)
220	242	198
110	121	99
66	69.3	62.7
50	52.5	47.5
33	36	30
22	24	20
11	12	10

Table B2: Maximum Short-Circuit Power and Current Limits

Nominal voltage (kV)	Maximum short-circuit power and current limits	
	(MVA)	(kA)
220	12,000	31.5*
110	6,000	31.5*
66	1,800	16*
50	1,350	16
33	1,400	25
22	950	25
11	475	25

* The values shown are the default existing fault maximum levels. At some sites the levels already exceed the levels shown and the number of sites that exceed the default levels will increase in the future. Ten year forecast maximum figures will be published annually.

Table B3: Voltage Levels for Insulation Co-ordination

Nominal voltage (kV)	Highest voltage for Equipment (kV)	Rated insulation level (kV)	Rated short duration (1 minute) power frequency withstand voltage (kV)
220	245	950	395
110	123	550	230
66	72.5	325	140
50	55	250	95
33	36	170	70
22	24	125	50
11	12	75	28

Table B4: Fault Clearance Times

Nominal Voltage (kV)	Design fault clearance time (ms)	Final fault clearance time (s)
220	120	4■
110	200	3
66	200	3
50	200	3
33*	200	3
22*	200	3
11*	200	3
33υ	1000	3
22υ	1000	3
11υ	1000	3

* Only bus and LV Transformer zone, not feeders

υ For close in high impedance feeder faults

■ The figure for 220 kV is higher than those below because of the grading required with protection at lower voltages